VIVIDAIR™
ANYTHING ELSE IS STALE

Scan me

Catalog Number:	
Notes:	
Type of Fan:	

Z-TECH™ FAN

FEATURES & SPECIFICATIONS

Z-TECH™ INTENDED USE: Ideal for spaces that need air movement to deliver optimum people comfort, safety, and productivity while enabling energy savings, material and labor cost avoidance resulting in the lowest total cost of ownership. Applications include warehousing, manufacturing, gymnasiums, agriculture and other indoor spaces with minimum 14 FT ceiling height.

Z-TECH™ INTENDED USE: The highly engineered, game changing combination of proven technologies brought to you exclusively by Go Fan Yourself! Use your Z-Tech™ fan to temper the air feeding the fan to provide the only true "cooler than ambient" breeze in the HVLS fan market. Heat is also available for spot control of important areas of virtually any facility. Control Z-TECH™ with your building management system and your GFY solution is only limited by your imagination!

NUMBER & TYPE OF BLADES: (5) patented Z-Tech™ blades with 20° plus pitch.

BLADE CONSTRUCTION: Extruded anodized aluminum blade with ABS leading edge and end caps with UV inhibitors. Frame is powder coated steel with a cast aluminum hub. Blade leading edge color is GFY orange.

ELECTRICAL (MOTOR): Superior motor built specifically for Go Fan Yourself. Designed for use with variable frequency drives; wound with 392° (200°C) moisture resistant Inverter Spike Resistant (ISR) magnetic wire. Dramatically extends the life of the motor compared to motors with non-ISR wire.

ELECTRICAL (CONTROLLER): Premium control with hardware flexibility, programmability, and scalability for an optimal solution. ABB Variable Frequency Drive – Nema 4X, IP66. ESFR relay ready to connect to existing fire suppression systems, integral LOTO (lock-out, tag-out) disconnect ship standard. ROHS compliant. 208-230v or 460v-480v standard.

INSTALLATION: Suitable for mounting by I-Beam, Top Chord angle iron, Bottom Chord angle iron, L-Bracket, and Z-Purlin. Standard mount is used for 6"-10" I-beams, XL mount is used for 12"-15" I-beams. 1 FT down tube is standard.

SAFETY: Z-TechSS™ safety system makes GFY the safest fan on the market. Safety ring (1/4" powder coated steel), five blade stabilizer plates (1/4" plate steel)

LISTINGS: Motor: IP55 H or F Rated Insulation
Controller: NEMA 4X, IP66

DESIGNER SERIES: Optional color & designs available.

OPERATING TEMPERATURES:

Motor & Gearbox:	H = 7° C (20° F) to 60° C (140° F) F = 7° C (20° F) to 50° C (122° F)
Controller:	- 7° C (20° F) to 50° C (122° F)

WARRANTY: Lifetime warranty on blades, hub and mounting system. 15-year warranty on motor, gearbox and controller. Complete warranty terms located at www.gofanyourself.com/company/warranty.

Z-TECH™ FAN

Z-TECH™ FAN WITH Z-CHILL™

made in AMERICA

VIVIDAIR™
ANYTHING ELSE IS STALE

Z-TECH™ FAN
TECHNICAL SPECIFICATIONS

Number and Type of Blades:	5 patented Z-Tech™ blades with 20° plus pitch.								
Blade Construction:	Extruded anodized aluminum blade with ABS leading edge and end caps with UV Inhibitors.								
Nominal Fan Diameter:	8 FT	10 FT	12 FT	14 FT	16 FT	18 FT	20 FT	22 FT	24 FT
Fan Weight:	285 lbs	295 lbs	305 lbs	315 lbs	325 lbs	365 lbs	375 lbs	385 lbs	395 lbs
Nominal Motor:	2 hp (1.5 kW)	2 hp (1.5 kW)	2 hp (1.5 kW)	2 hp (1.5 kW)	2 hp (1.5 kW)	2 hp (2.2 kW)	2 hp (2.2 kW)	2 hp (2.2 kW)	2 hp (2.2 kW)
Nominal RPM:	120	120	120	76	76	76	70	56	56
Max. Destratification Coverage:	80 FT	100 FT	120 FT	140 FT	160 FT	180 FT	200 FT	220 FT	240 FT
Max. Cooling Diameter:	75 FT	85 FT	100 FT	130 FT	140 FT	150 FT	160 FT	165 FT	180 FT
Nominal Amperage:	2.65 A	2.65 A	2.65 A	2.65 A	2.65 A	3.5 A	3.5 A	3.5 A	3.5 A
Standard or Optional XL Mount:	Clamp standard to 6" to 10" I-Beams. XL Mount fits 12" to 15" I-Beams.								
ABB VFD Controller:	Universal I-beam clamps; Down Tubes from 1-10 FT in length.								
	Premium motor control with hardware flexibility, programmability and scalability for an optimal solution.								
	ROHS compliant, ESFR relay ready, integral LOTO disconnect and IP66 Nema 4X rated.								
Safety Features:	Safety ring (1/ 4" powder coated steel), Z-Tech SS								
Warranty[1]:	15-year on motor, gearbox and control panel.								
	Lifetime on blades, hub and mounting system.								

FOOTNOTES:
1) See Installation & Technical Operations Guide for warranty specifications/exclusions (prorated/limited).

Example Part Number: GFY-Z-24-460-3-1-STD-T

Family	Style	Diameter	Voltage	Phase	Down Tube	Mount	Mounting Kit	Options
GFY	Z Z-Chill[1,9,17]	8 (8 FT) 10 (10 FT) 12 (12 FT) 14 (14 FT) 16 (16 FT) 18 (18 FT) 20 (20 FT) 22 (22 FT) 24 (24 FT)	120[2] 230[2] 460[2]	1 (Single)[2] 3 (Three)[2]	1 (1 FT)[3] 2 (2 FT) 3 (3 FT) 4 (4 FT)[4] X (X FT)[5]	STD (6"-10" Beam)[6] XL (12"-15" Beam)[7]	T (Truss/I-Beam)[8] Z (Z-Purlin)[8, 15] WB (Wood Beam)[16] (Concrete Beam)[16]	DS__[11,19,20] (Designer Series) (enter 1, 2, 3, 4, or C)[10] (enter HUB or S for Hub paint or Sticker Only) WM[12] (Wall Mount Keypad) CP[13] (Custom Programming) FM[14,18] (VFD Field Mounted to Fan Frame)

FOOTNOTES

1) Z-Chill™ ships with the maximum 3ft downtube standard. A 2 FT downtube is optional.
2) Available voltages:
   a) Three Phase Applications: 200-240VAC | 380-480VAC
   b) Single Phase Applications: 100-120VAC | 200-240VAC
3) 1 FT Down Tube is standard with all GFY Z-Tech™ fans (see note 15). If ordering the optional Z-Chill™ a 3 FT Down Tube will ship standard.
4) Down Tubes longer than 3 FT require a Guy Wire Kit shipped automatically with the Down Tube.
5) Consult the factory for Down Tubes longer than 4 FT.
6) Use STD mount for optional Truss Mount, Z-Purlin Mount and Wood / Concrete Beam Mounts (consult a local structural engineer for all concrete beam fan mounts).
7) XL Mount is only used for 12"-15" I-beam applications.
8) Truss Mount and Z-Purlin Mounts require contractor supplied 3"x3"x1/4" steel angles cut to size. See pages in this spec sheet or the Installation and Technical Operations Guide for greater detail.
9) Z-Chill™ only available on Z-Tech™ fans 16 FT in diameter and larger.
10) Designer Series Options (see paperwork in this spec sheet for greater detail, pictures of Designer Series fans and ordering information):
   a)Option #1 - Motor and all (5) Z-Tech™ leading edges a standard GFY RAL color. Customer logo to replace GFY logo on hub.
   b)Option #2 - Motor and (3) Z-Tech™ leading edges one standard GFY RAL color, (2) Z-Tech™ leading edges another standard GFY RAL color. Customer logo to replace GFY hub logo.
   c)Option #3 - Motor and all (5) Z-Tech™ leading edges a standard GFY RAL color. Aluminum Blades one standard GFY RAL color. Customer logo to replace GFY logo on hub.
   d)Option #4 - Motor and (3) Z-Tech™ leading edges one standard GFY RAL color, (2) Z-Tech™ leading edges another standard GFY RAL color. Aluminum Blades one standard GFY RAL color. Customer logo to replace GFY hub logo.
   e)Custom Option: Motor MUST be a standard GFY RAL color. Z-Tech™ leading edges and aluminum blades may be a custom color. Customer logo to replace GFY hub logo.
11) Designer Series fans have custom lead times. Consult the factory to receive a lead-time quote for your desired option.
12) Allows the control keypad to be mounted up to 14 FT from the ABB controller. Keypad mounts inside a GFY custom mount. Kit ships complete with 15 FT CAT 6 data cable. Maximum cable length is 300 FT. Longer CAT6 data cables to be supplied by installing contractor.
13) Consult the factory as an extended lead time will apply. Customer's team and GFY's team must communicate so programming details may be identified. There may be additional hardware or software charges. Not all programming options may be available on every control. Navigator control system included under "Custom Programming".
14) Optional fan mounted VFD. ABB VFD control mounting bracket and hardware ships with fan to be field installed by the contractor. Contractor needs only run power to the fan location, mount the bracket to the fan, mount the controller to the bracket and make the standard electrical connections. Wall Mount Keypad Kit ships with a 150' CAT 6 data cable. Longer cables are installing contractor provided.
15) Z-Purlin and Top Chord Mount applications require a 2 FT Down Tube for all Z-Tech™ fans 18 FT and larger to provide the fan the required 5 FT minimum clearance above the blades.
16) Contact a local structural engineer for all concrete and wood beam applications to verify the beam will support the fan with the prescribed mounting system.
17) Z-Chill™ equipped fans must not be hung with the Z-Purlin Kit. Z-Chill™ equipped Z-Tech™ fans must mount to the I-Beams in Z-Purlin applications.
18) Fan Mounted VFD option is not available with Z-Chill™
19) Designer Series has been expanded to include painting the hub. Same standard colors and optional colors apply.
20) Designer Series Hub Logo Only - If customer wants only a custom logo sticker on the bottom of the hub. No custom paint on any fan component.

made in AMERICA

VIVIDAIR™
ANYTHING ELSE IS STALE

Z-TECH™ FAN

NOMINAL DIMENSIONS
COMPONENT DESCRIPTIONS

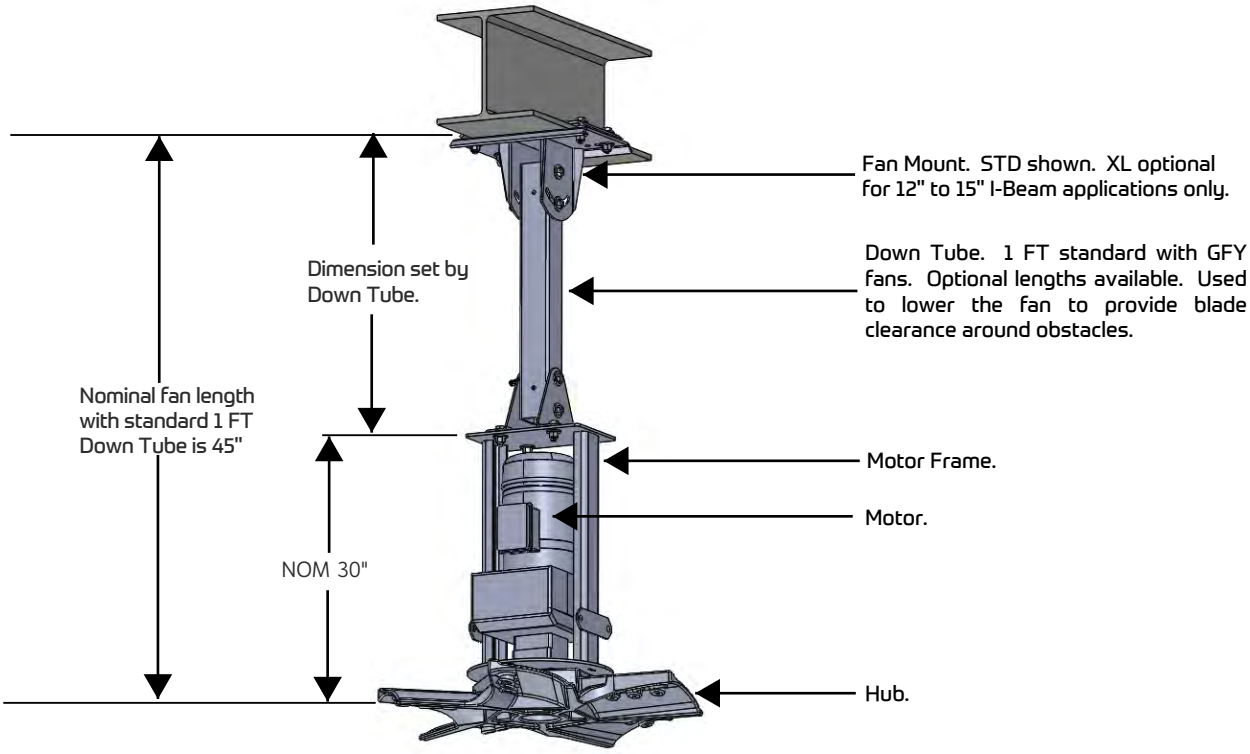

Follow the Factory Mutual Insurance Company (FM Global) standards, Heating equipment manufacturer's guideline and safety standards such as those published by the National Fire Protection Association (NFPA), and the American Society for Heating, Refrigeration and Air Conditioning Engineers (ASHRAE), and local code authorities.

Z-CHILL™

GFY's patented revolutionary tempered air delivery system. Z-Chill™ is a highly engineered vent/louver system that delivers tempered air to GFY's Z-Tech™ fan. Cool air, hot air, or both can be introduced into the top of your Z-Tech™ fan and optimally spread across the Z-Chill™ coverage area. Z-Chill™ is the most innovative product to hit the HVLS fan market since 1996 when the first HVLS fan was made. Easily installs with any GFY Z-Tech™ fan. A 2 FT down tube is required and will ship automatically with every Z-Chill™. Available with new Z-Tech™ fans or retrofit existing Z-Tech™ fans.

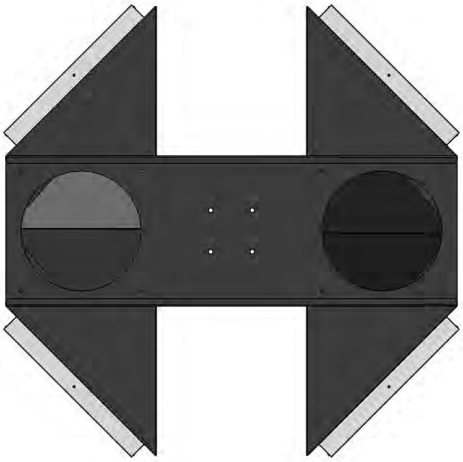

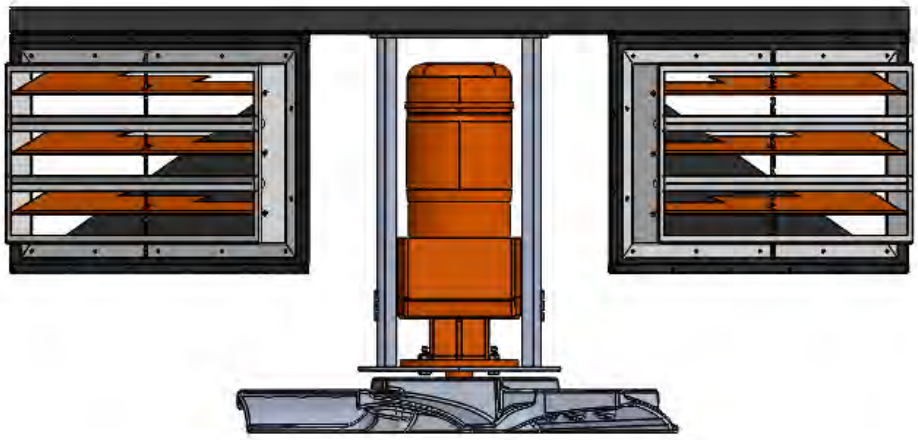

made in AMERICA

VIVIDAIR™
ANYTHING ELSE IS STALE

Z-TECH™ FAN

FAN LOCATION GUIDELINES

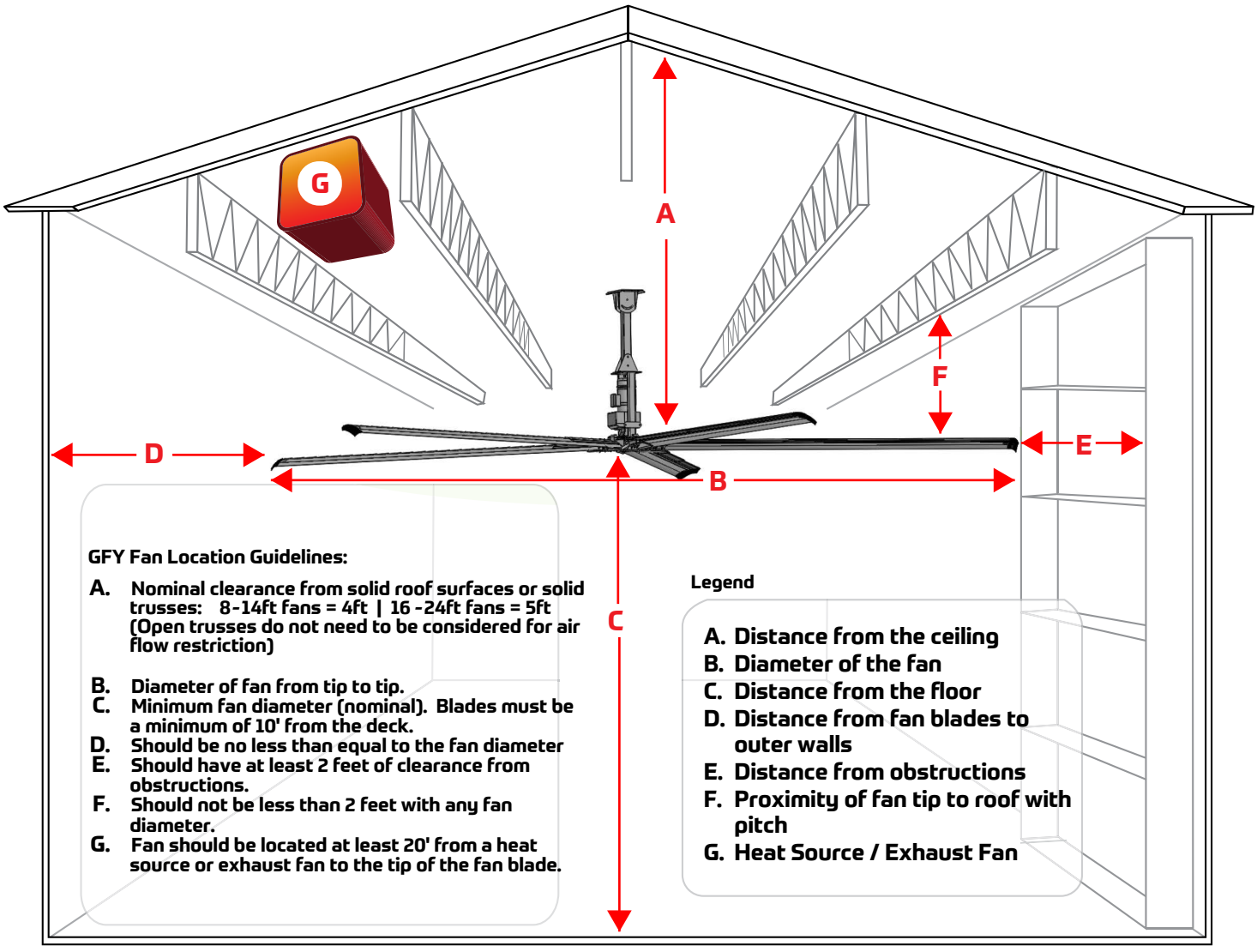

GFY Fan Location Guidelines:

A. Nominal clearance from solid roof surfaces or solid trusses: 8-14ft fans = 4ft | 16 -24ft fans = 5ft (Open trusses do not need to be considered for air flow restriction)

B. Diameter of fan from tip to tip.
C. Minimum fan diameter (nominal). Blades must be a minimum of 10' from the deck.
D. Should be no less than equal to the fan diameter
E. Should have at least 2 feet of clearance from obstructions.
F. Should not be less than 2 feet with any fan diameter.
G. Fan should be located at least 20' from a heat source or exhaust fan to the tip of the fan blade.

Legend

A. Distance from the ceiling
B. Diameter of the fan
C. Distance from the floor
D. Distance from fan blades to outer walls
E. Distance from obstructions
F. Proximity of fan tip to roof with pitch
G. Heat Source / Exhaust Fan

made in AMERICA

VIVIDAIR™
ANYTHING ELSE IS STALE

Z-TECH™ FAN

TECHNICAL SPECIFICATIONS
MAXIMUM COVERAGE GUIDE

24' Diameter Fan (nominal)

1) Number of Blades: 5 Patented Z-Tech™ Blades
2) Blade Pitch: 20°+
3) Minimum Blade Height: 24 FT (Blade from Floor)
4) Maximum Cooling Diameter: 180 FT
5) Maximum Destratification Coverage: 240 FT
6) Nominal Rotations Per Minute: 56 RPM
7) Nominal Motor: 2.0 HP (2.2kW)
8) Nominal Amps: 3.5A@480V
9) System Weight: 395 lbs
10) Maximum Mounting Distance Between Fans: 165 FT
11) Nominal Clearance From Solid Roof Surfaces: 5 FT

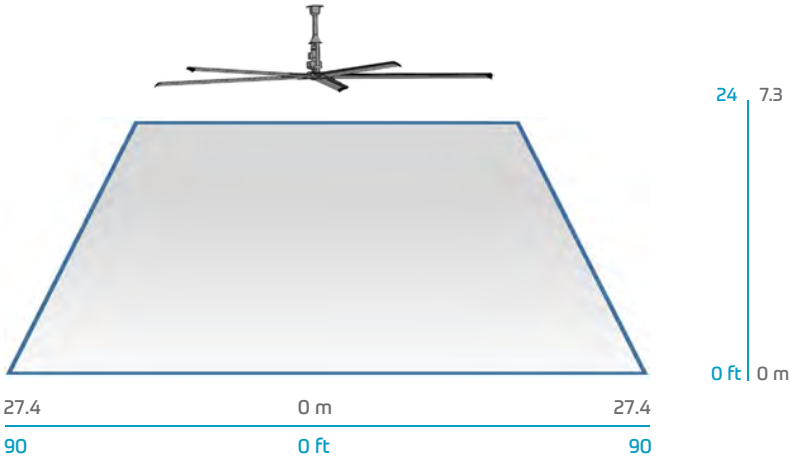

22' Diameter Fan (nominal)

1) Number of Blades: 5 Patented Z-Tech™ Blades
2) Blade Pitch: 20°+
3) Minimum Blade Height: 22 FT (Blade from Floor)
4) Maximum Cooling Diameter: 165 FT
5) Maximum Destratification Coverage: 220 FT
6) Nominal Rotations Per Minute: 56 RPM
7) Nominal Motor: 2.0 HP (2.2kW)
8) Nominal Amps: 3.5A@480V
9) System Weight: 385 lbs
10) Maximum Mounting Distance Between Fans: 150 FT
11) Nominal Clearance From Solid Roof Surfaces: 5 FT

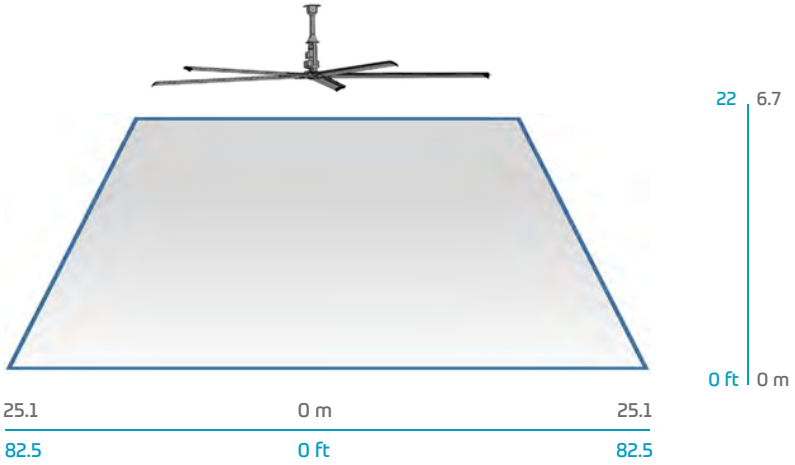

20' Diameter Fan (nominal)

1) Number of Blades: 5 Patented Z-Tech™ Blades
2) Blade Pitch: 20°+
3) Minimum Blade Height: 20 FT (Blade from Floor)
4) Maximum Cooling Diameter: 160 FT
5) Maximum Destratification Coverage: 200 FT
6) Nominal Rotations Per Minute: 70 RPM
7) Nominal Motor: 2.0 HP (2.2kW)
8) Nominal Amps: 3.5A@480V
9) System Weight: 375 lbs
10) Maximum Mounting Distance Between Fans: 145 FT
11) Nominal Clearance From Solid Roof Surfaces: 5 FT

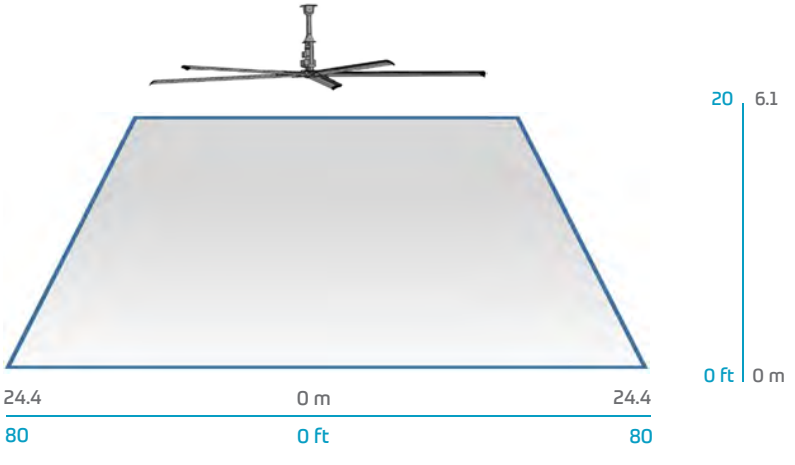

made in AMERICA

VIVIDAIR™
ANYTHING ELSE IS STALE

Z-TECH™ FAN

TECHNICAL SPECIFICATIONS
MAXIMUM COVERAGE GUIDE

18' Diameter Fan (nominal)

1) Number of Blades: 5 Patented Z-Tech™ Blades
2) Blade Pitch: 20°+
3) Minimum Blade Height: 18 FT (Blade from Floor)
4) Maximum Cooling Diameter: 150 FT
5) Maximum Destratification Coverage: 180 FT
6) Nominal Rotations Per Minute: 76 RPM
7) Nominal Motor: 2.0 HP (2.2kW)
8) Nominal Amps: 3.5A@480V
9) System Weight: 365 lbs
10) Maximum Mounting Distance Between Fans: 135 FT
11) Nominal Clearance From Solid Roof Surfaces: 5 FT

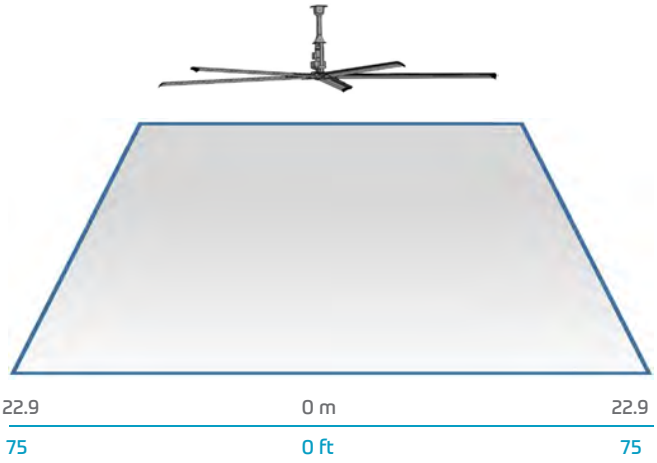

16' Diameter Fan (nominal)

1) Number of Blades: 5 Patented Z-Tech™ Blades
2) Blade Pitch: 20°+
3) Minimum Blade Height: 16 FT (Blade from Floor)
4) Maximum Cooling Diameter: 140 FT
5) Maximum Destratification Coverage: 160 FT
6) Nominal Rotations Per Minute: 76 RPM
7) Nominal Motor: 1.5 HP (1.5kW)
8) Nominal Amps: 2.65A@480V
9) System Weight: 325 lbs
10) Maximum Mounting Distance Between Fans: 125 FT
11) Clearance From Solid Roof Surfaces: 5 FT

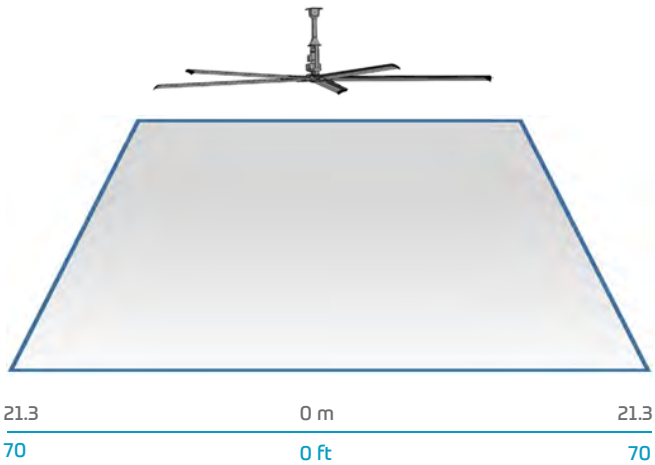

14' Diameter Fan (nominal)

1) Number of Blades: 5 Patented Z-Tech™ Blades
2) Blade Pitch: 20°+
3) Minimum Blade Height: 14 FT (Blade from Floor)
4) Maximum Cooling Diameter: 125 FT
5) Maximum Destratification Coverage: 140 FT
6) Nominal Rotations Per Minute: 76 RPM
7) Nominal Motor: 2.0 HP (1.5 kW)
8) Nominal Amps: 2.65A@480V
9) System Weight: 315 lbs
10) Maximum Mounting Distance Between Fans: 105 FT
11) Nominal Clearance From Solid Roof Surfaces: 4 FT

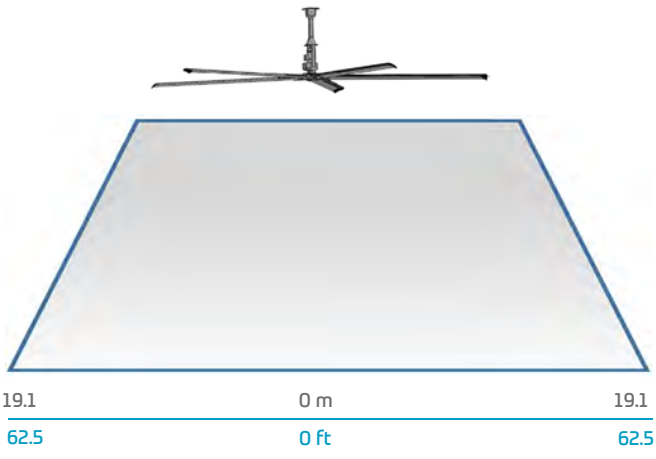

made in AMERICA

VIVIDAIR™
ANYTHING ELSE IS STALE

Z-TECH™ FAN

TECHNICAL SPECIFICATIONS
MAXIMUM COVERAGE GUIDE

12' Diameter Fan (nominal)

1) Number of Blades: 5 Patented Z-Tech™ Blades
2) Blade Pitch: 20°+
3) Minimum Blade Height: 12 FT (Blade from Floor)
4) Maximum Cooling Diameter: 110 FT
5) Maximum Destratification Coverage: 120 FT
6) Nominal Rotations Per Minute: 120 RPM
7) Nominal Motor: 2.0 HP (1.5kW)
8) Nominal Amps: 2.65A@480V
9) System Weight: 305 lbs
10) Maximum Mounting Distance Between Fans: 95 FT
11) Nominal Clearance From Solid Roof Surfaces: 4 FT

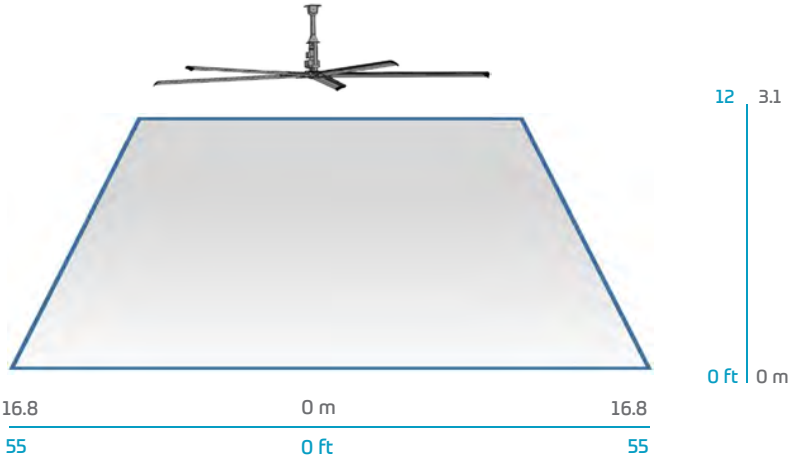

10' Diameter Fan (nominal)

1) Number of Blades: 5 Patented Z-Tech™ Blades
2) Blade Pitch: 20°+
3) Minimum Blade Height: 10 FT (Blade from Floor)
4) Maximum Cooling Diameter: 90 FT
5) Maximum Destratification Coverage: 100 FT
6) Nominal Rotations Per Minute: 120 RPM
7) Nominal Motor: 2 HP (1.5 kW)
8) Nominal Amps: 2.65A@480V
9) System Weight: 295 lb
10) Maximum Mounting Distance Between Fans: 75 FT
11) Nominal Clearance From Solid Roof Surfaces: 4 FT

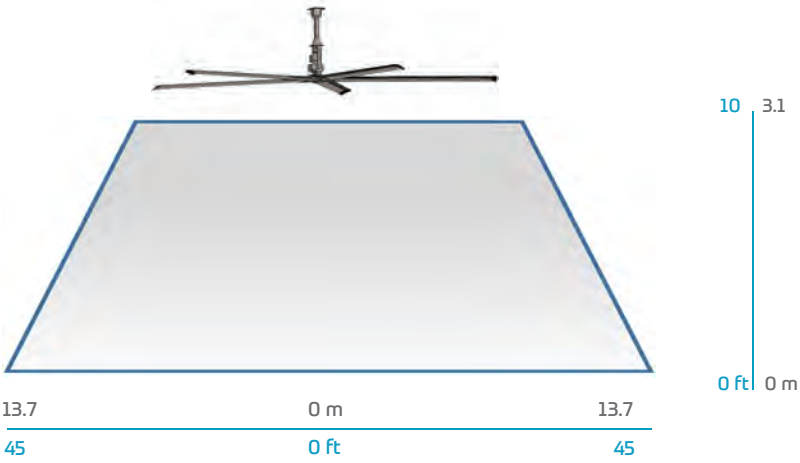

8' Diameter Fan (nominal)

1) Number of Blades: 5 Patented Z-Tech™ Blades
2) Blade Pitch: 20°+
3) Minimum Blade Height: 10 FT (Blade from Floor)
4) Maximum Cooling Diameter: 70 FT
5) Maximum Destratification Coverage: 80 FT
6) Nominal Rotations Per Minute: 120 RPM
7) Nominal Motor: 2 HP (1.5 kW)
8) Nominal Amps: 2.65A@480V
9) System Weight: 285 lb
10) Maximum Mounting Distance Between Fans: 55 FT
11) Nominal Clearance From Solid Roof Surfaces: 4 FT

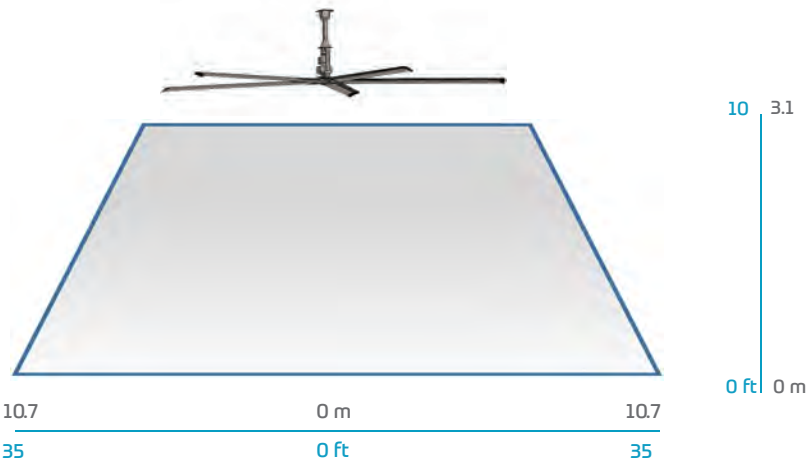

ADDITIONAL SPECIFICATION NOTES: See GFY FAN LOCATION GUIDELINES in this spec sheet for additional details.

1. Minimum 2 FT of clearance from obstructions.
2. Minimum 2 FT below truss with any fan diameter.
3. Should be at least one fan diameter away from a heat source.
4. Should be at least one fan diameter away from any exhaust fan(s).
5. Should be at least one fan diameter away from any wall.
6. Fan should be no closer than 3ft to sprinkler heads (observe local codes).
7. Lights may need to be spaced 2 FT or greater away from the tip of the fan blade to prevent shadowing.

Z-TECH™ FAN
TYPICAL MOUNT DETAILS

Top Chord Angle Iron Mount

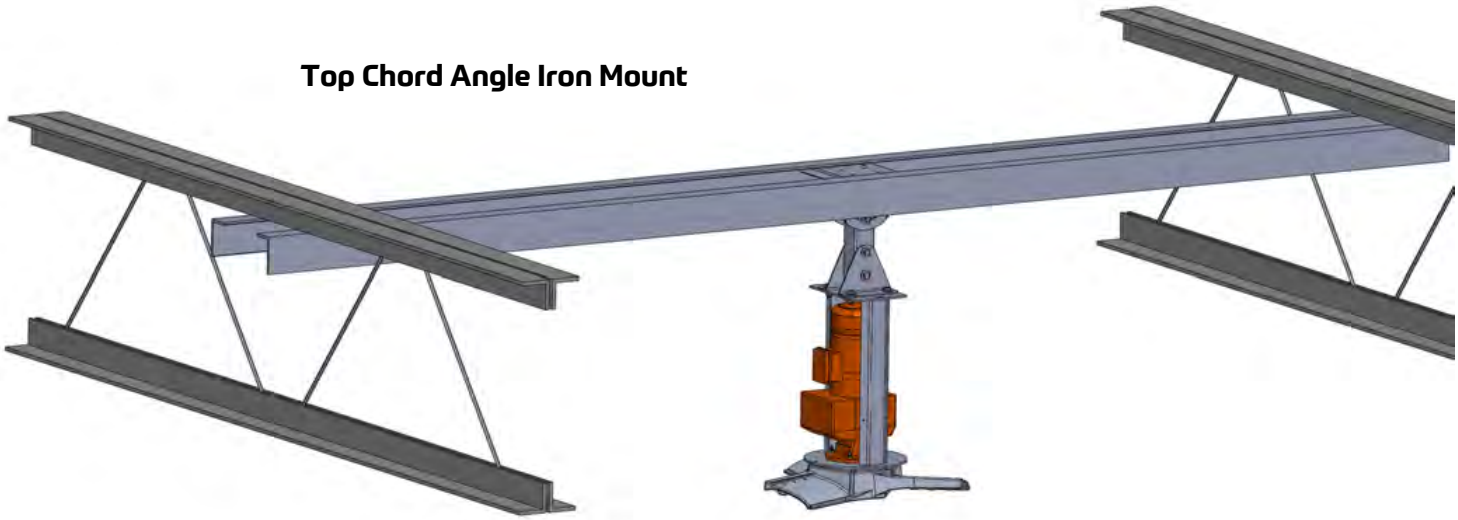

- The 3"x3"x1/4" steel angles must be supplied by the installing contractor. Hardware used to secure the angles to the mounting structure is not included.
- If the truss span is wider than 8 FT (4) steel angles and the XL Mount are required. Reference the Installation & Technical Operations Guide or contact GFY for additional instructions.

Bottom Chord Angle Iron Mount

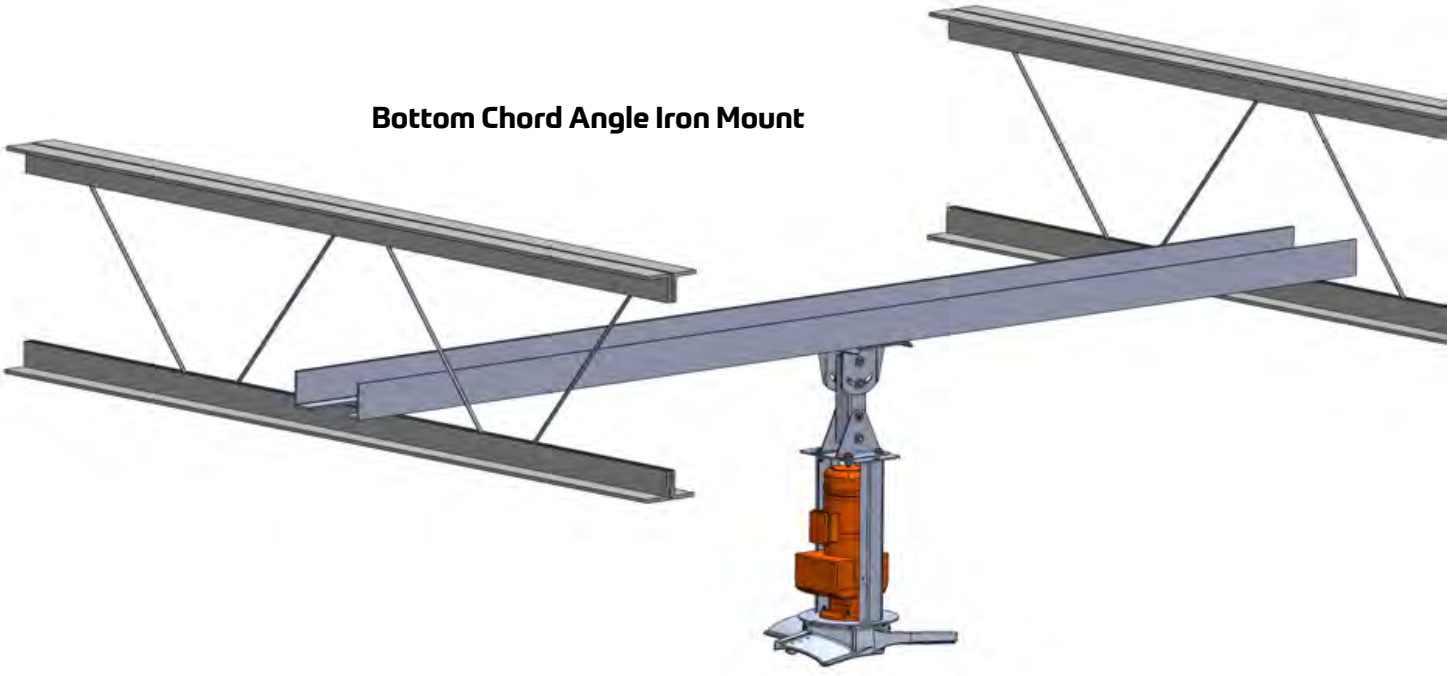

- The 3"x3"x1/4" steel angles must be supplied by the installing contractor. Hardware used to secure the angles to the mounting structure is not included.
- If the truss span is wider than 8 FT (4) steel angles and the XL Mount are required. Reference the Installation & Technical Operations Guide or contact GFY for additional instructions.

Z-TECH™ FAN
TYPICAL MOUNT DETAILS

"Z-Purlin" Mount

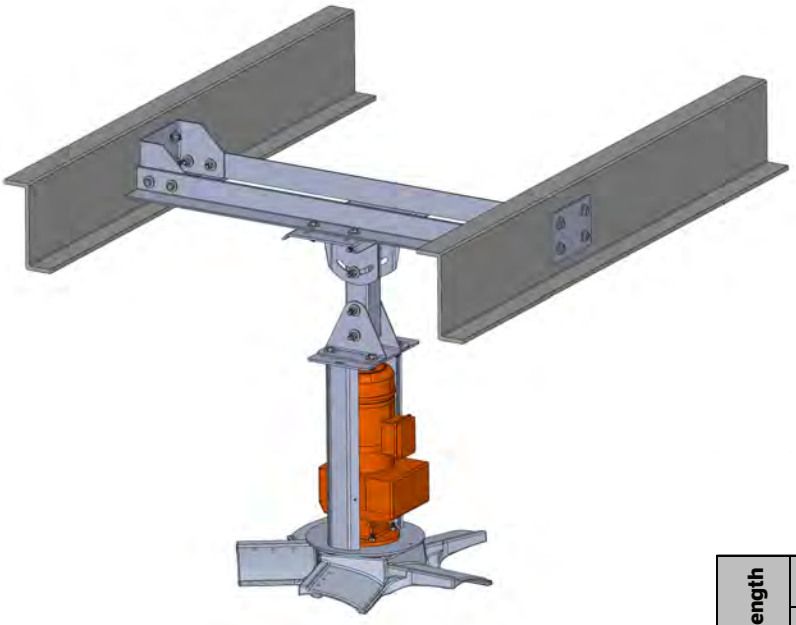

Z-PURLIN REQUIREMENTS

- The 3"x3"x1/4" steel angles must be supplied by the installing contractor.
- Maximum unsupported length (see chart below).
- Spacing between Z-Purlins should 5 FT or less.
- Z-Purlins must be a minimum of 14 gauge steel.
- This mounting system may also be required to span concrete beams.
- Consult a local structural engineer for any concrete beam applications.

		Purlin Height		
		8" (20.3 cm)	9" (22.9 cm)	10" (25.4 cm)
Purlin Length	<20' (6.1 m)	Intended use	Intended Use	Intended Use
	<25' (7.6 m)	DO NOT USE	Intended Use	Intended Use
	<30' (9.1 m)	DO NOT USE	DO NOT USE	Intended Use

Wood Beam Mount

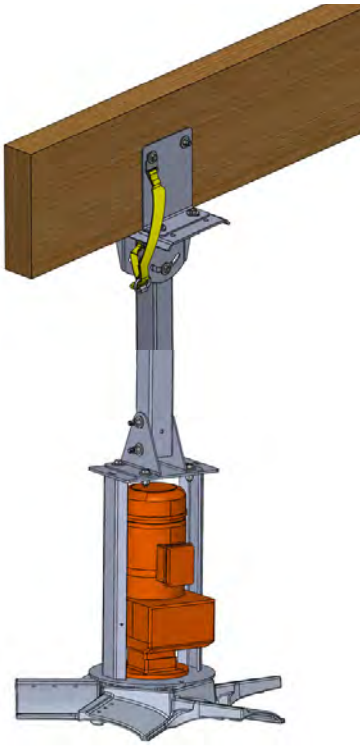

Installing contractor must supply L-bracket anchor hardware as described below:

- (2) 1/2"-13 x "1 1/2" longer than the support structure" Grade 8 Hex Cap Screw
- (4) 1/2" ASTM F436 Type 1 Grade 8 Mechanical Galvanized Steel Structural Flat Washer
- (2) 1/2"-13 Grade 8 Steel Nylock Nut

Z-TECH™ FAN

ABB VARIABLE FREQUENCY DRIVES

ABB ASC355 VFD Controller
200-240VAC 3 Phase
380-480VAC 3 Phase

ABB ASC255 VFD Controller
100-120VAC 1 Phase
200-240VAC 1 Phase

Fan Control RoHS COMPLIANT

- ABB Variable Frequency Drive Enclosure - Nema 4X (IP66).
- Special Wiring (Thermostats, Fire Alarm Interface, Networking, Etc.) (Optional) Consult Factory.
- 50 / 60 Hz Operation.
- All GFY Z-Tech™ Controls ship standard with an Early Suppresion Fast Response Relay ready to connect to existing fire suppression systems.
- GFY Z-Tech™ Fan Controls ship standard with an integral Lock Out Tag Out Disconnect.
- ASC355 can interlink and run up to 25 fans from a single keypad (Additional wiring and programming required).

VIVIDAIR™
ANYTHING ELSE IS STALE

Z-TECH™ FAN

WALL MOUNT KEYPAD ON BOARD CONTROLS

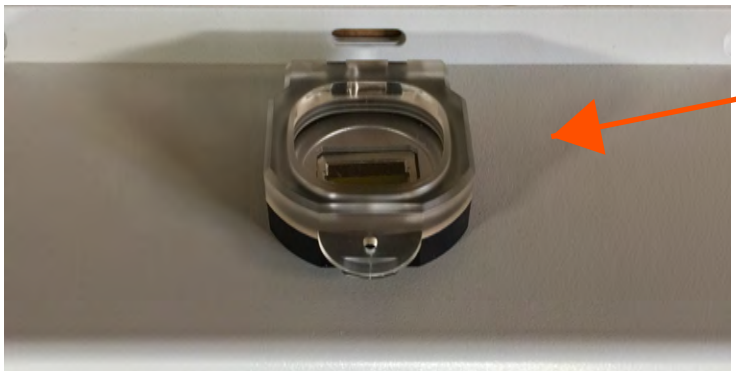

- Optional Wall Mount Keypad provides far greater flexibility for your GFY fan installation.
- Mount the VFD Controller in the ceiling or high on the column for safety and security and drop the keypad down to a user friendly mounting height.
- Wall Mount Keypad option ships from GFY with a 10 FT and a 100 FT CAT6 data cable allowing the keypad to be mounted approximately 24 FT below the VFD Controller.
- Max CAT6 data cable length is 300 FT. Longer cable is supplied by the installing contractor.
- Box size is 9" x 6" x 2 3/4"

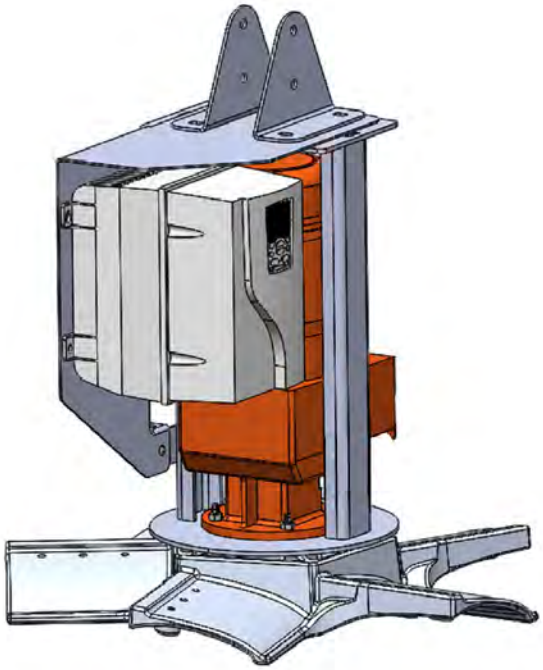

- Fan Mounted Control option locates the VFD Controller on a bracket mounting directly to the fan frame.
  - GFY - Access to the VFD is available without fan disassembly.
  - 8-10 airfoil fans - One airfoil must be removed to access the VFD for service work.
- The Wall Mount Keypad option is included in the cost of this option.
- GFY provides a 10 FT and a 100 FT data cable to connect the Wall Mount Keypad option. Longer cable is installing contractor provided.