VIVIDAIR™
ANYTHING ELSE IS STALE

Scan me

Z-TECH3™ FAN

INSTALLATION & TECHNICAL OPERATIONS GUIDE

GO FAN YOURSELF, INC. | 1032 NATIONAL PARKWAY | SCHAUMBURG, IL 60173 | www.vividairmovement.com | 1-844-GOFANME (463-2663) OR 1-847-648-4920

Invertek Controller Made In England
Blade Raw Material US or Canadian
ABB Controller Made Overseas - Final Assembly In US

made in AMERICA

VIVIDAIR™
ANYTHING ELSE IS STALE

Scan me

VividAir
1032 National Parkway
Schaumburg, IL 60173
1-844-GOFANME (463-2663)
1-847-648-4920
www.vividairmovement.com

INSTALLATION CHECK IN / CHECK OUT

Email completed form and required pictures to: drew.keller@vividairmovement.com

Company: _____

Address: _____

City/State/Zip: _____ **Contact Name:** _____

Email: _____ **Phone:** _____

INSTALLATION CHECK IN

Installation crew supervisor and facility manager are to complete checklist prior to entering the jobsite or unloading materials.

1. Contractor and customer have reviewed the scope of work/layout including: fan placement, controller placement, and power supply panel(s) to be used.

☐

2. Contractor and customer have reviewed the fan installation manual for the type of fan mount at each location.

☐

3. Contractor and customer have reviewed the installation schedule and any site specific safety rules and regulations (i.e., specific requirements, gear, certifications, lock out/tag out, prohibited areas, secure areas, areas to avoid, special machinery, dangerous conditions or areas and how to detour such places if needed):

☐

Additional Comments:

Customer Signature: _____ **Contractor Signature:** _____

Printed Name: _____ **Printed Name:** _____

Date: _____ **Date:** _____

INSTALLATION CHECK OUT

Installation crew supervisor and facility manager are to complete checklist after completing installation.

1. Fan and controller placement agrees with the check in (above), scope of work and layout.

☐

☐ 2. Contractor has reviewed with the customer the breaker location for all fans and the customer understands the lock out/tag out (LOTO) procedure on all fan controllers.

3. No safety incidents were reported by or on the contractor during the fan installation.

☐

☐ 4. All fans are running and the customer has been trained on operation in both directions. The fan operation section of the manual has been reviewed.

☐ 5. The customer understands the warranty for each fan and the warranty information in the manual has been reviewed.

☐ 6. The customer has been given a copy of the installation manual for all styles of VividAir fans installed as part of this project.

☐ 7. The customer is comfortable with fan operation including starting/stopping, speed adjustment, reversing direction, and power disconnect with LOTO.

☐ 8. The contractor has taken pictures of all fans individually clearing showing the full fan in the ceiling (required to active the warranty).

☐ 9. The contractor has taken pictures of all fans clearly showing the routing and connection of both safety cables (required to active the warranty).

☐ 10. The contractor has taken pictures of all fan controllers mounted in their final position (required to activate the warranty).

Customer Signature: _____ **Contractor Signature:** _____

Printed Name: _____ **Printed Name:** _____

Date: _____ **Date:** _____

Itemized Checklist - Unpacking Your VividAir Fan

Motor Hub Assembly Box

- There are 3 trays inside the Motor Hub Assembly Box
  (Trays Detailed On Following Pages)

Blade Box Skid

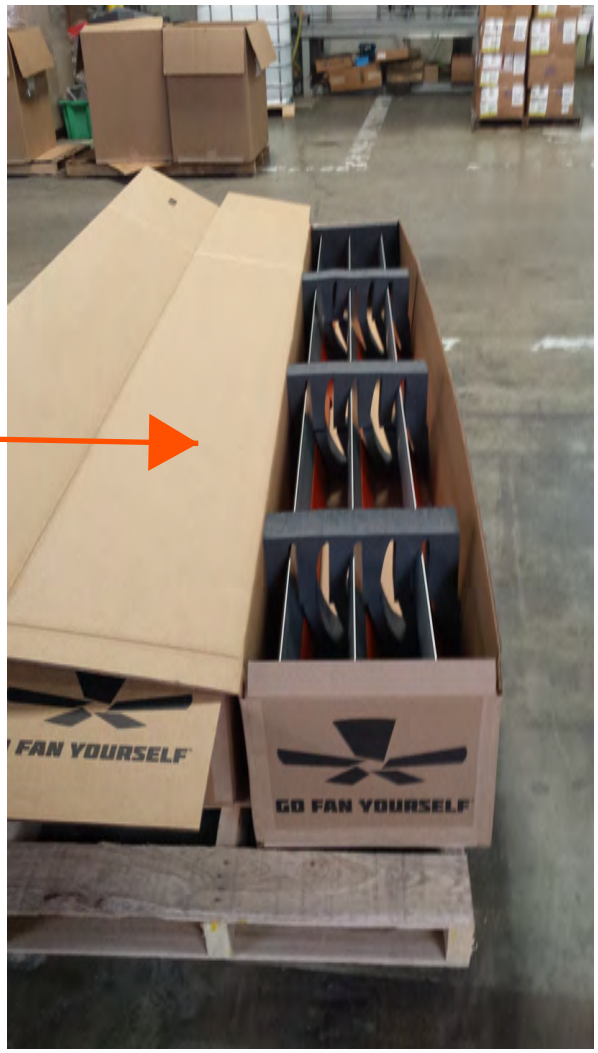

Blade Stabilizer Box will typically ship on the Blade Box skid. Box is 36x6x6 and shown on page 6.

Down Tubes 3FT and Longer May Also Be Packaged and Shipped On The Blade Box Skid

Itemized Checklist - Motor Assembly Box Tray #1 - Top Tray

Down Tube
1FT or 2FT Down Tubes Only. Longer Down Tubes will Be Packaged Separately

Upper Yoke Weldment & Beam Clamp Plates

ACS355 or ACS255 VFD Controller
ACS255 Controller Shown

Accessory Area
Typical Items Packed Here Will Include:

- Z-Purlin Mounting Kit
- Wood Beam Mounting Kit
- Guy Wire Kit

Your Fan May Include Other Optional Accessories

Itemized Checklist - Motor Assembly Box Tray #2 - Middle Tray

Truss Mount Kit (4) Square Washers

Z-TechSS™ 3/8" Quick Link

Manual & Optional Accessories

ACS355 or ACS255 VFD Controller
(ACS255 Shown)

Hardware Packs

Itemized Checklist - Motor Assembly Box Tray #3 - Bottom Tray

Motor Hub Assembly

Lower Yoke Plates

Fan Mount Shims

To Keep The Beam Clamp Plates Near Level When Clamping To Thicker I-Beams. Add Additional Shims If Required.

Itemized Checklist - VFD Controllers, Blade Box, Blade Stabilizer Box

VividAir VFD Controller
200-240V 1 Phase
200-240V 3 Phase
400-480V 3 Phase

ABB ACS355 Controller
200-240VAC 3 Phase
400-480VAC 3 Phase

ABB ACS255 Controller
200-240VAC 1 Phase

Itemized Checklist - Fan Blade Box

Blade Set (3 Blades) 8ft, 10ft , 12ft, 16ft, 20ft, 24ft

Itemized Checklist - Fan Blade Stabilizers Packed With Motor

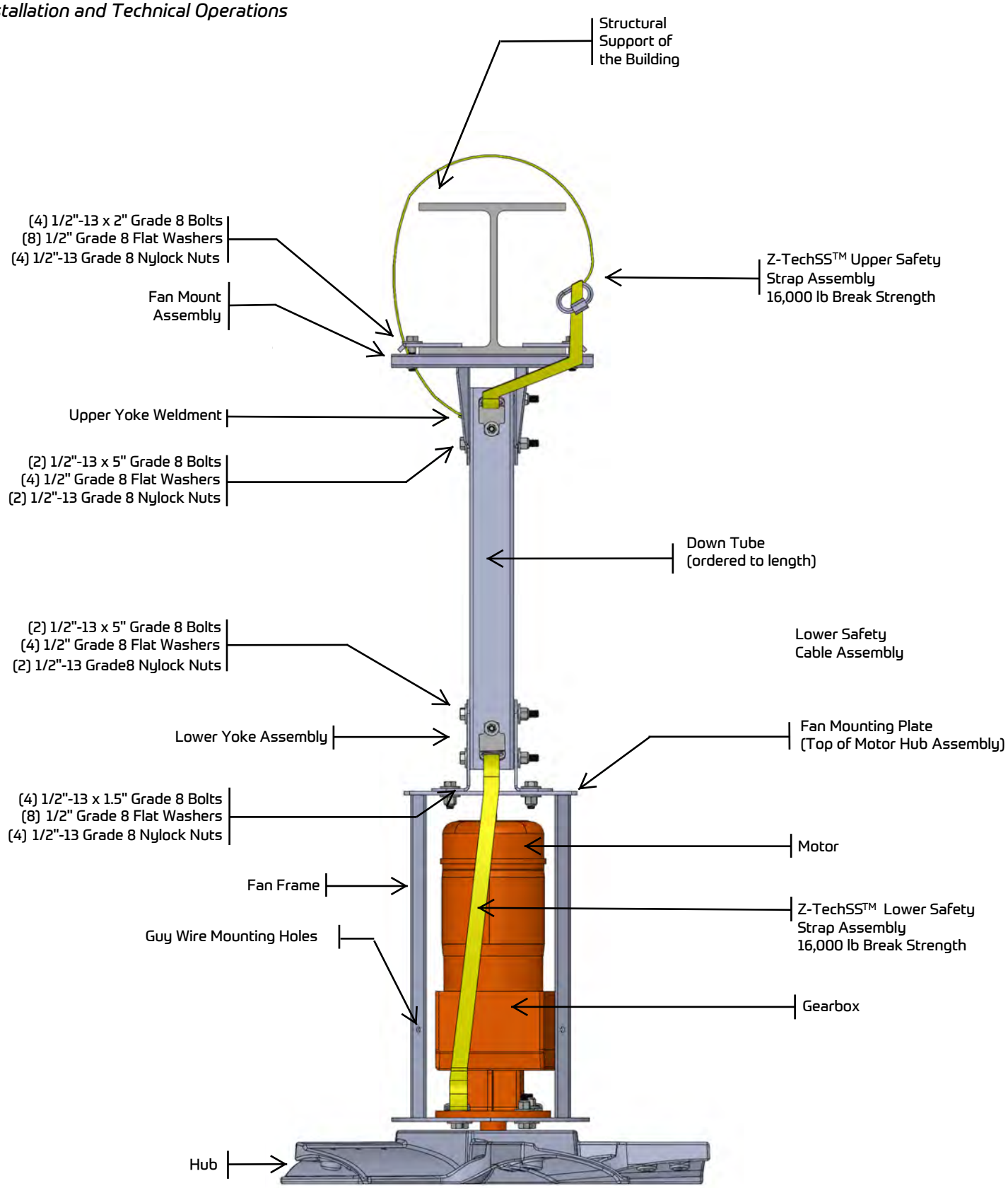
Structural Support of the Building
(4) 1/2"-13 x 2" Grade 8 Bolts
(8) 1/2" Grade 8 Flat Washers
(4) 1/2"-13 Grade 8 Nylock Nuts
Fan Mount Assembly
Z-TechSS™ Upper Safety Strap Assembly 16,000 lb Break Strength
Upper Yoke Weldment
(2) 1/2"-13 x 5" Grade 8 Bolts
(4) 1/2" Grade 8 Flat Washers
(2) 1/2"-13 Grade 8 Nylock Nuts
Down Tube (ordered to length)
(2) 1/2"-13 x 5" Grade 8 Bolts
(4) 1/2" Grade 8 Flat Washers
(2) 1/2"-13 Grade8 Nylock Nuts
Lower Safety Cable Assembly
Lower Yoke Assembly
Fan Mounting Plate (Top of Motor Hub Assembly)
(4) 1/2"-13 x 1.5" Grade 8 Bolts
(8) 1/2" Grade 8 Flat Washers
(4) 1/2"-13 Grade 8 Nylock Nuts
Motor
Fan Frame
Z-TechSS™ Lower Safety Strap Assembly 16,000 lb Break Strength
Guy Wire Mounting Holes
Gearbox
Hub

Table of Contents

Recommended VividAir Fan Clearances

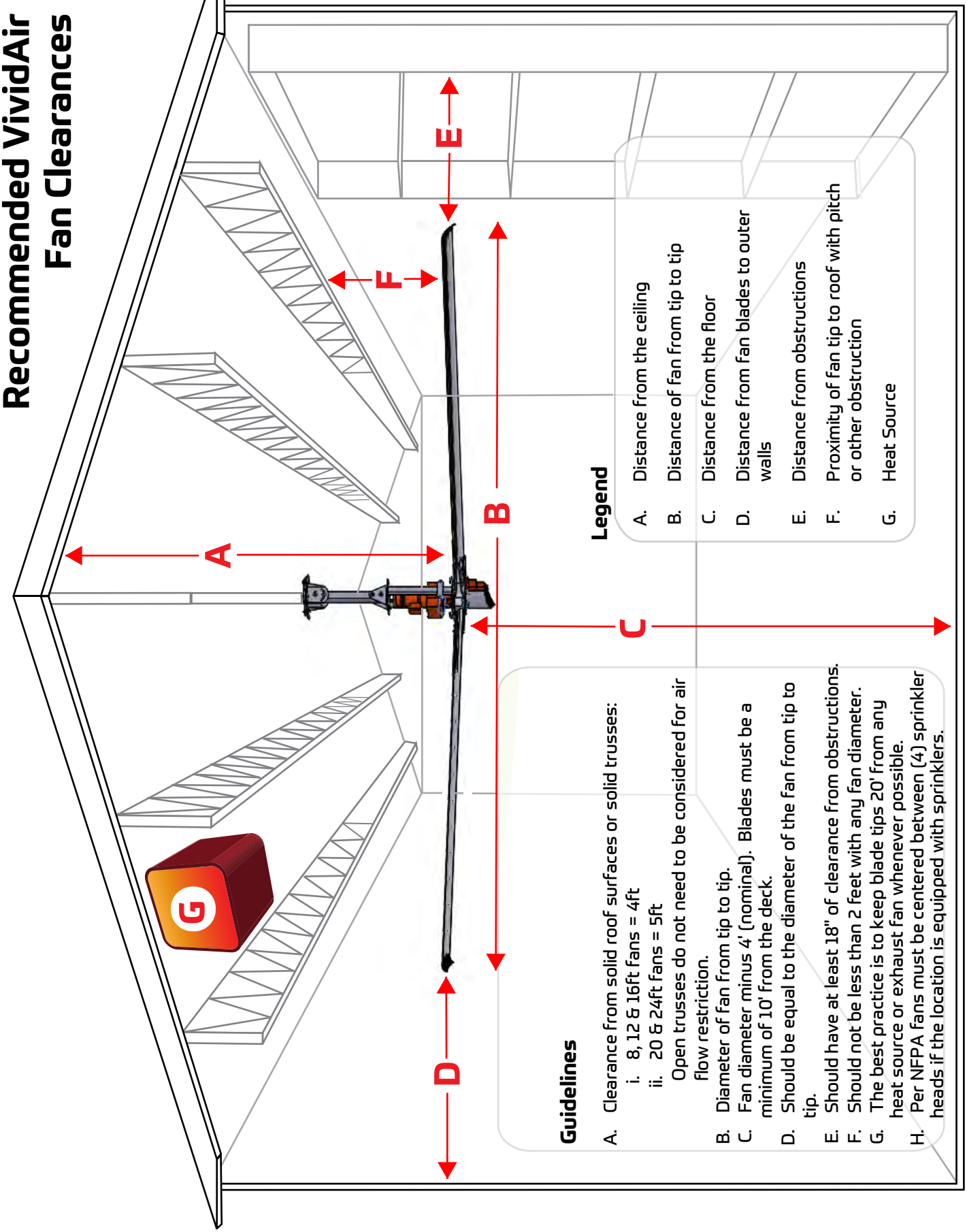

Legend

A. Distance from the ceiling
B. Distance of fan from tip to tip
C. Distance from the floor
D. Distance from fan blades to outer walls
E. Distance from obstructions
F. Proximity of fan tip to roof with pitch or other obstruction
G. Heat Source

Guidelines

A. Clearance from solid roof surfaces or solid trusses:
   i. 8, 12 & 16ft fans = 4ft
   ii. 20 & 24ft fans = 5ft
   Open trusses do not need to be considered for air flow restriction.
B. Diameter of fan from tip to tip.
C. Fan diameter minus 4' (nominal). Blades must be a minimum of 10' from the deck.
D. Should be equal to the diameter of the fan from tip to tip.
E. Should have at least 18" of clearance from obstructions.
F. Should not be less than 2 feet with any fan diameter.
G. The best practice is to keep blade tips 20' from any heat source or exhaust fan whenever possible.
H. Per NFPA fans must be centered between (4) sprinkler heads if the location is equipped with sprinklers.

Follow the Factory Mutual Insurance Company (FM Global) standards, Heating equipment manufacturer's guideline and safety standards such as those published by the National Fire Protection Association (NFPA), and the American Society for Heating, Refrigeration and Air Conditioning Engineers (ASHRAE), and local code authorities.

WARNING: A structural engineer will need to verify that the structure is suitable prior to the installation of the fan. The fan should not be installed unless the structure on which the fan will be mounted is securely constructed, without damages, and can support the load of the fan. It is the sole responsibility of the customer/end user to have the stability of the mounting structure verified. VividAir hereby denies any liability resulting from the lack of verification or from the use of any materials or hardware than those supplied by VividAir or otherwise indicated within these installation instructions.

1. Tools Required to Install Product

- Level
- High torque 1/2" impact gun with impact socket set
- Torque wrench capable of 30 ft-lbs +/- 2 ft-lbs
- Standard socket set
- Standard wrench set
- Scissor or Boom Lift

2. Required Steps Before Installation

- Check to see if you have all the tools required for the installation.
- Verify that all fan components were received.
- Check drawings and layouts provided to locate where the Z-Tech™ Fan is to be installed.
- Each person installing the Z-Tech™ Fan must use a safety harness at all times.
- Other safety requirements may be required for installation.
- All workspace safety requirements and lock out/tag out procedures provided by the customer for the assembly and installation of the Z-Tech™ Fan must be met and followed.

Start your installation

3. Different Mounting Applications

Note: The following mounting applications are representations only and are subject to change without notice. Contact your sales representative or the VividAir office for complete mounting instructions.

"I" Beam Mounting

Fig.2

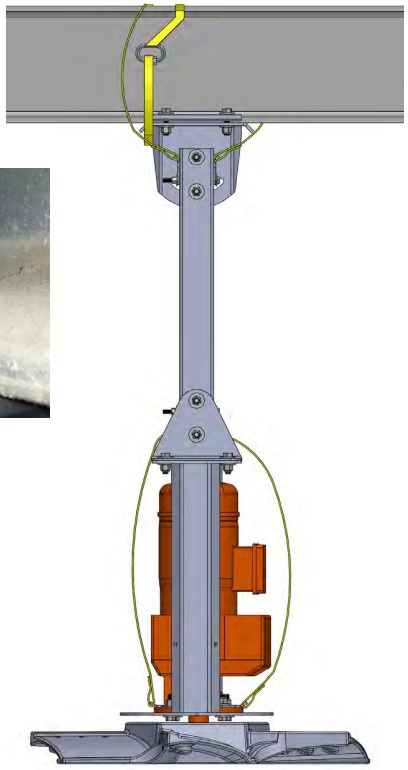

Insert optional shims (found in bottom tray of your fan packaging) to keep Beam Clamp Plates near level if I-Beam is thicker than the bend in the Beam Clamp Plate. Shims insert on top of the Upper Yoke Assembly and are secured with the mounting hardware. See picture above and following pages for additional details.

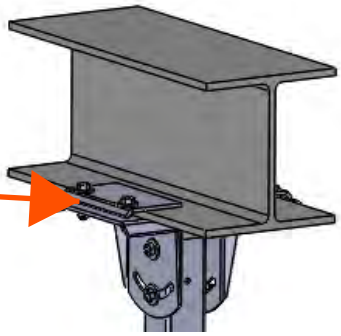

3. Different Mounting Applications

Bottom Chord Angle Iron Mount
Drill holes in angle iron and direct mount in place of using Beam Clamp Plates.

Fig.3

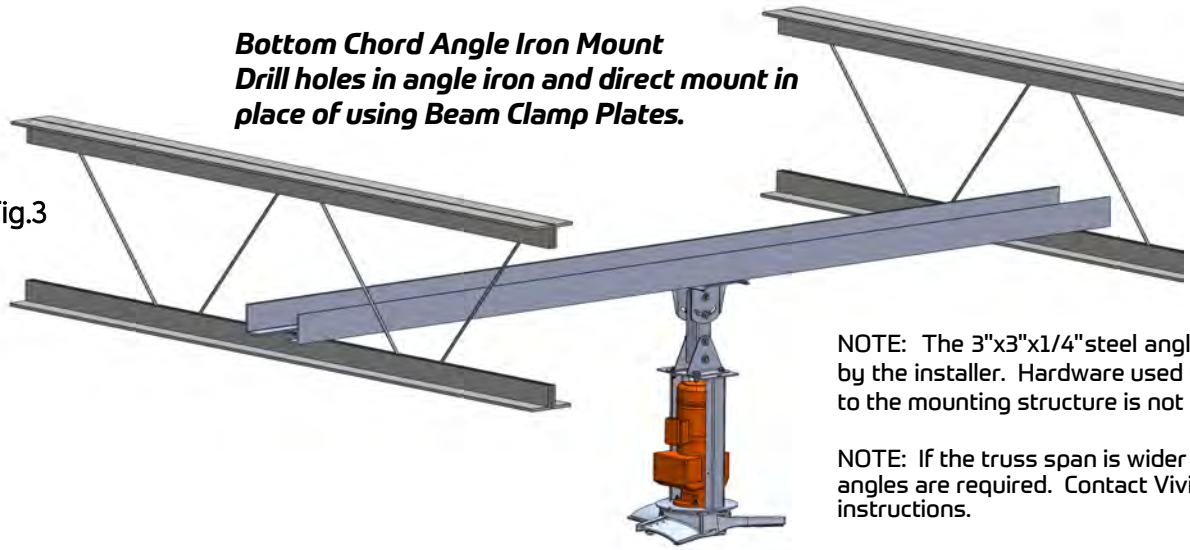

NOTE: The 3"x3"x1/4"steel angles must be supplied by the installer. Hardware used to secure the angles to the mounting structure is not included.

NOTE: If the truss span is wider than 8 FT (4) steel angles are required. Contact VividAir for additional instructions.

*****NOTE*** Hardware A, B, and C below are contractor supplied.**

A - (4) 1/2"x13x1.5" longer than the lower chord of the truss Grade 8 Cap Head Screw
B - (8) 1/2" Grade 8 Flat Washer
C - (4) 1/2"x13 Grade 8 Steel Nylock Nut
D - (1) VividAir Truss Mount Kit will be included with your fan (kit consists of (4) large square washers). Tighten all hardware to a minimum 40 ft lbs (54.2 Nm).

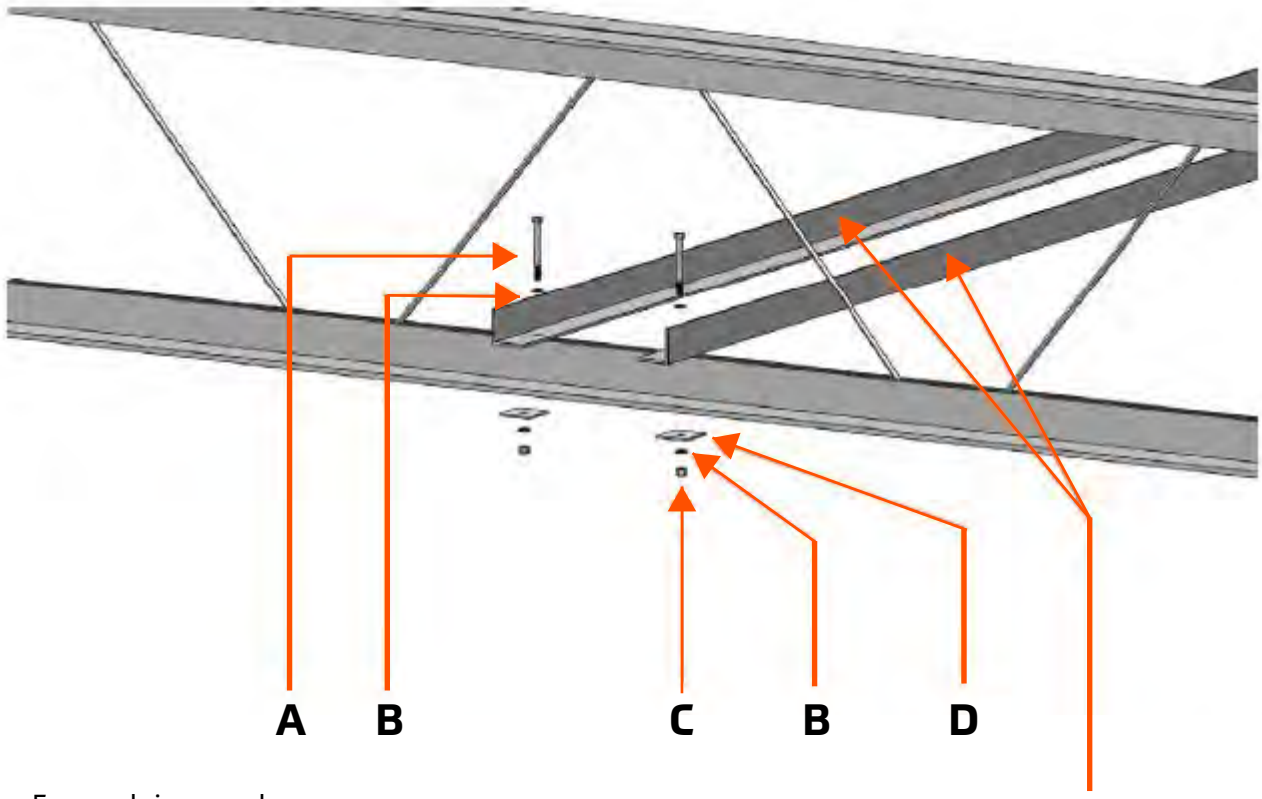

3"x3"x1/4" Steel Angles

- Face angle irons as shown.
- Once mounted use Upper Yoke Weldment and mark mounting holes on the angle irons.
- Drill (2) holes in each angle iron and direct mount the Upper Yoke Weldment to the angle irons.
- The Beam Clamp Plates and shims are not used in this application.

3. Different Mounting Applications *(continued)*

Top Chord Angle Iron Mount
Drill holes in angle iron and direct mount in place of using Beam Clamp Plates.

Fig.4

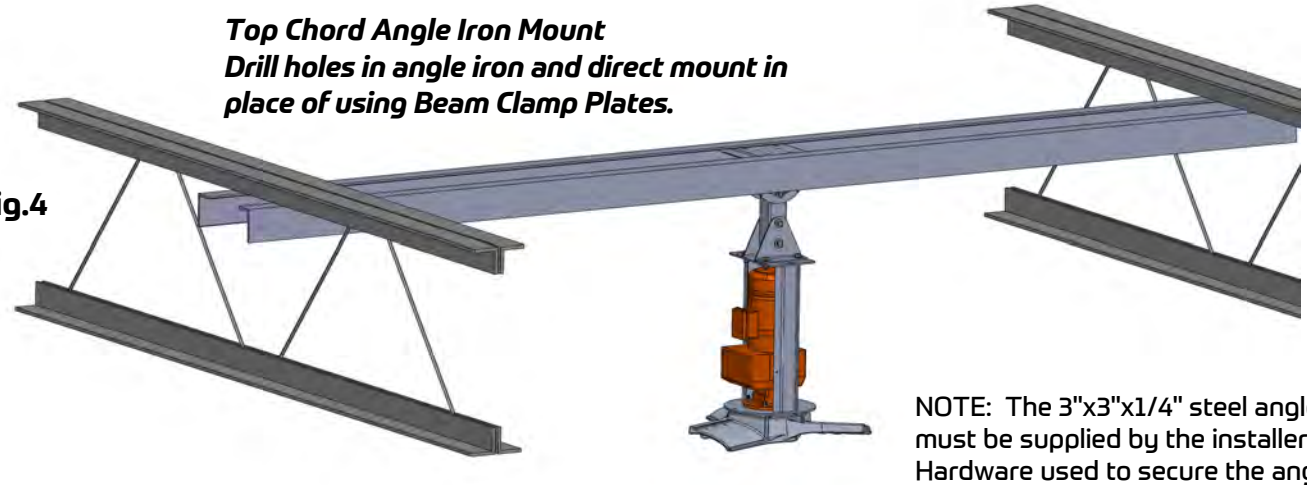

NOTE: The 3"x3"x1/4" steel angles must be supplied by the installer. Hardware used to secure the angles to the mounting structure is not included.

NOTE: If the truss span is wider than 8' (4) steel angles are required. Contact VividAir for additional instructions.

*****NOTE*** Hardware A, B, and C below are contractor supplied:**

A - (4) 1/2"-13x(chord height + 1.5") Grade 8 Cap Head Screw
B - (8) 1/2" Grade 8 Flat Washer
C - (4) 1/2"-13 Grade 8 Steel Nylock Nut
D - (1) VividAir Truss Mount Kit will be included with your fan (kit consists of (4) large square washers).
Tighten all hardware to a minimum 40 ft lbs (54.2 N·m).

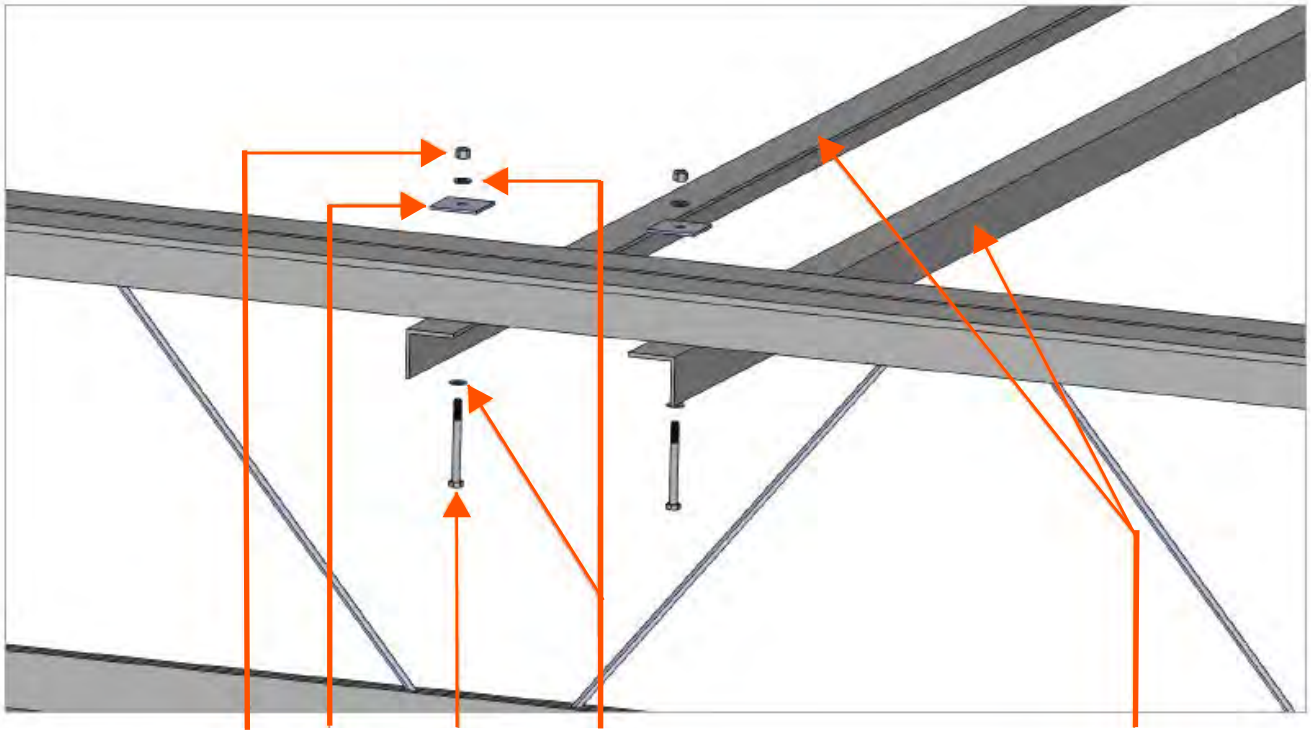

3"x3"x1/4" Steel Angles

- Face angle irons as shown.
- Once mounted use Upper Yoke Weldment and mark mounting holes on the angle irons.
- Drill (2) holes in each angle iron and direct mount the Upper Yoke Weldment to the angle irons.
- The Beam Clamp Plates and shims are not used in this application.

3. Optional Mounting Applications

VividAir Wood/Concrete Beam Kit Must Be Orde

"L-Bracket" Mounting
(Refer to L-Bracket Installation Guide received with your fan)
A local structural engineer should be consulted to verify all L-Bracket Mounting applications.

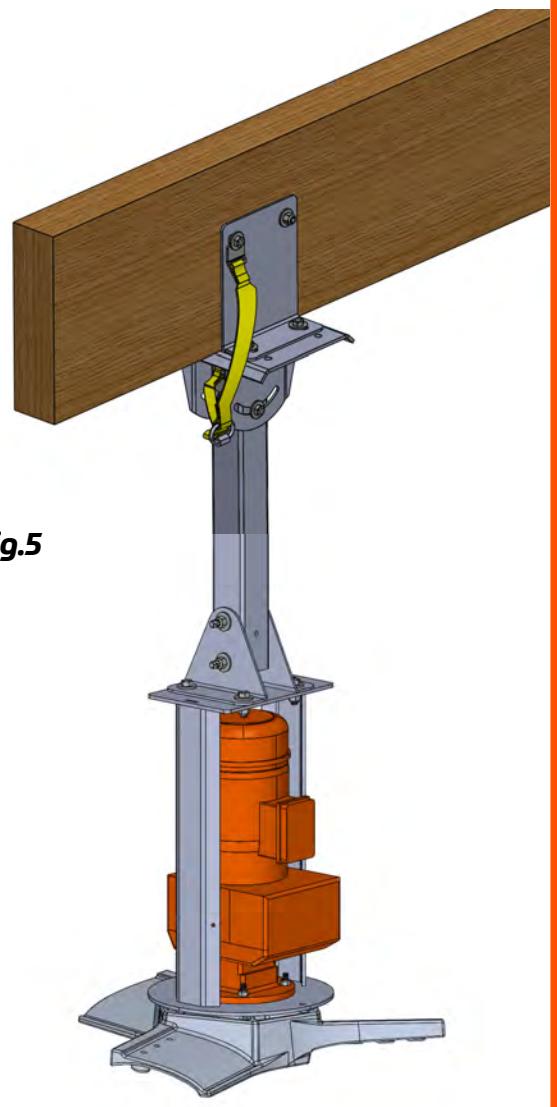

Fig.5

Secure L-Brackets

As shown below secure the L-Brackets and Safety Clips with Quick Links to the mounting structure with installer-supplied hardware.

Required Contractor Supplied Hardware:

(2) 1/2"-13 x 1 1/2" longer than the support structure Grade 8 Hex Cap Screw
(4) 1/2" Grade 8 Flat Washer
(2) 1/2"-13 Grade 8 Steel Nylock Nut

Tighten all hardware to a minimum 40 ft lbs (54.2 N·m).

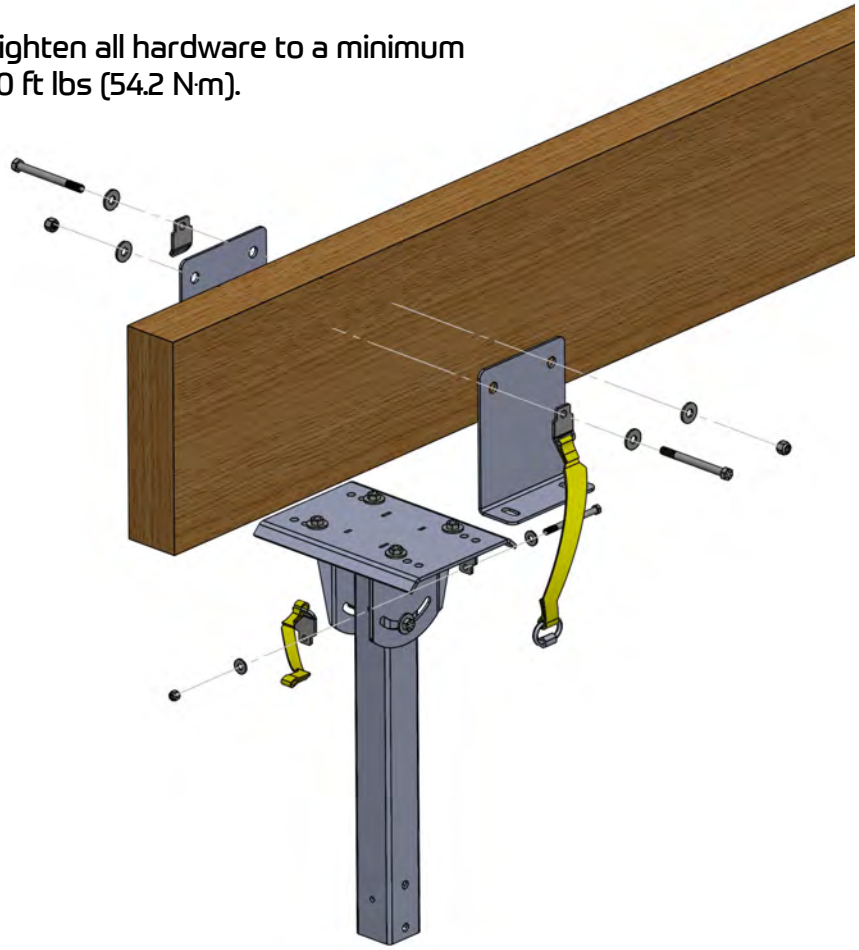

3. Optional Mounting Applications *(continued)*

VividAir Z-Purlin Kit Must Be Ordered

"Z-Purlin" Mounting
(Refer to Z-Purlin Installation Guide received with your fan for additional details).

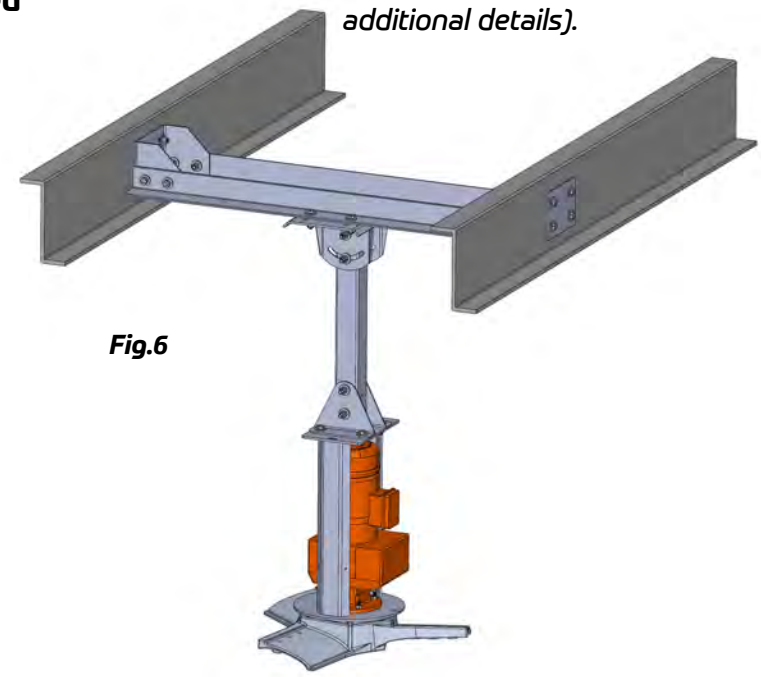

Fig.6

1) Drill the Z-Purlins using the backer plate as a template and anchor the backer plate to the Purlin Bracket with supplied hardware. Tighten to 40 ft lbs (54.2 Nm).
2) Measure and pre-drill the angle irons for the fan mount using the mount as a template.
3) Finger tight the angle irons facing outward to hold them in place and attach the fan mount.
4) Tighten both the fan mount hardware and the angle iron hardware to a minimum 40 ft lbs (54.2 Nm).

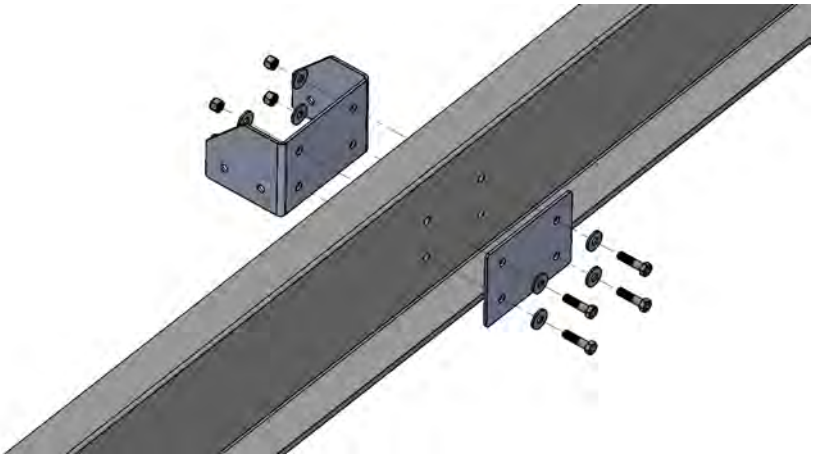

Mounting Hardware Supplied
a. (16) 1/2"-13 x 2" Grade 8 Hex Head Cap Screw
b. (32) 1/2" Grade 8 Flat Washer
c. (16)1/2" Grade 8 Nylock Nut
Tighten all hardware to a minimum 40 ft lbs (54.2 N · m).

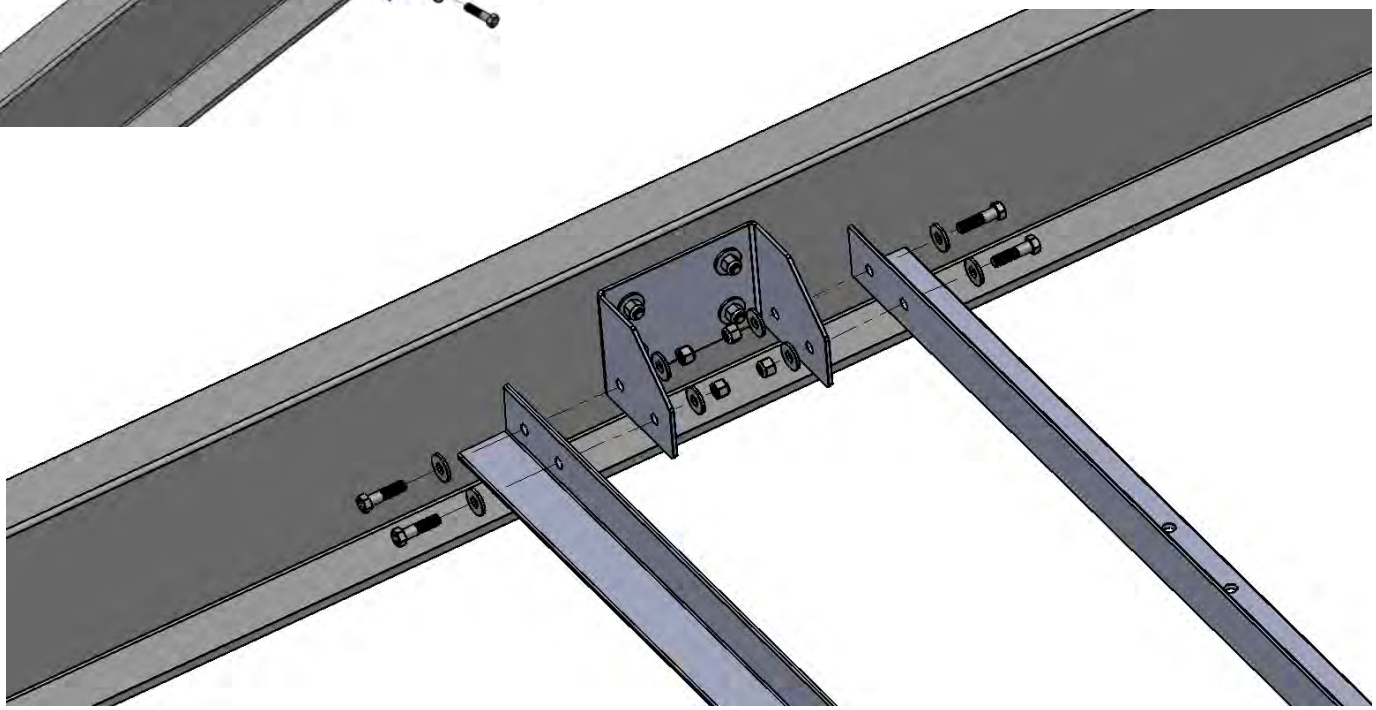

4. Standard Mount

A Standard Mount is used for 6"-10" I-Beams and all optional mounting kits. Down Tube is ordered to length.

An optional XL Mount is used for 12"-15" I-Beams and truss angle iron mounts when the truss span is greater than 8ft. This requires (4) 3"x3"x1/4" steel angles. Contact VividAir formore information.

The package includes:
(2) mfg I-Beam Clamp Plates.
(2) mfg I-Beam Spacers (may or may not be required for assembly)
(1) Upper Yoke Weldment*

*Down Tube and Lower Yoke are shown as a preview of the fan mount assembly

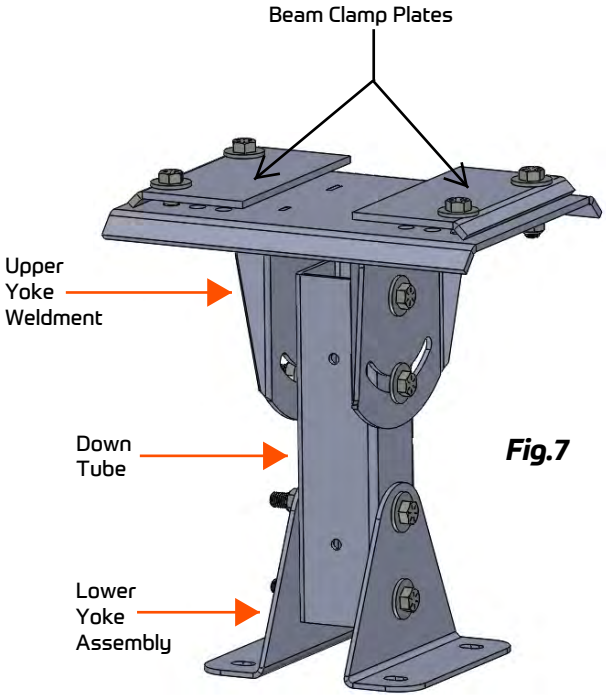

Fig.7

Installing the Mount

1. Secure the I-Beam or OWSJ Beam between the mfg I-Beam Clamps and the Upper Yoke. Insert the mfg I-Beam Spacers if required.
2. Insert the bolts, washers and tighten to a minimum 40 ft-lbs (54.2 N·m). (Fig 8)

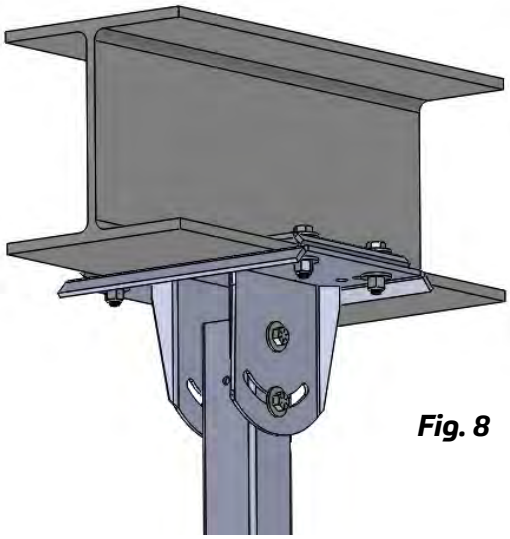
Fig. 8

Upper Yoke Mounting Hardware:
(4) 1/2"x13x2" Grade 8 Hex Cap Screw
(8) 1/2" ASTM F436 Type 1 Mechanical Galvanized Steel Structural Flat Washer
(4) 1/2"x13 Grade 8 Steel Nylock Nut

Tighten the bolts to a minimum 40 ft-lbs (54.2 N·m)

Insert optional shims (found in bottom tray of your fan packaging) to keep Beam Clamp Plates near level to the mounting surface of the I-Beam when the I-Beam is thicker than the bend in the Beam Clamp Plate. Shims insert on top of the Upper Yoke Assembly and are secured with the mounting hardware.

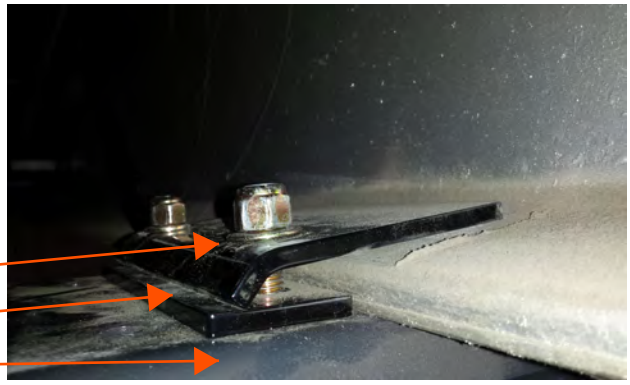

5. Down Tube

This package includes:
(1) Down Tube
(standard 1ft, ordered to length).
(2) Z-Tech™ SS Upper Safety Straps Break strength = 16,000 lbs.

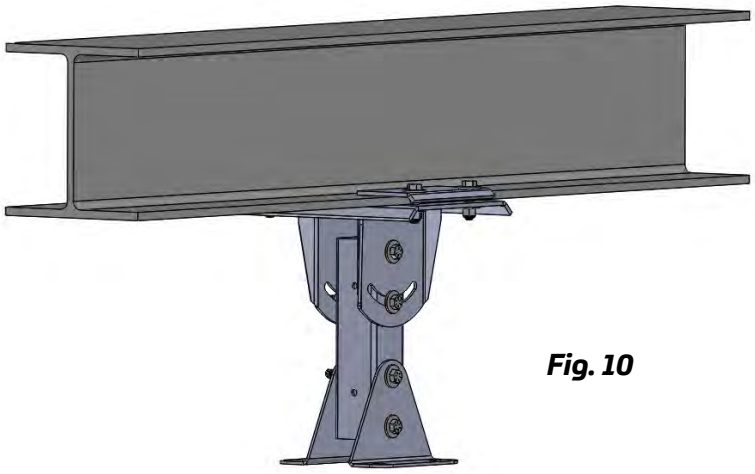

Fig. 10

Hardware Pack:
(4)1/2"x13x5" Grade 8 Hex Cap Screw
(8) 1/2"x1.375" Thru Hardened General Purpose Flat Washer
(4)1/2"x13 Grade 8 Steel Nylock Nut

NOTE The Guy Wire Kit must be used to stabilize the fan during normal operation.

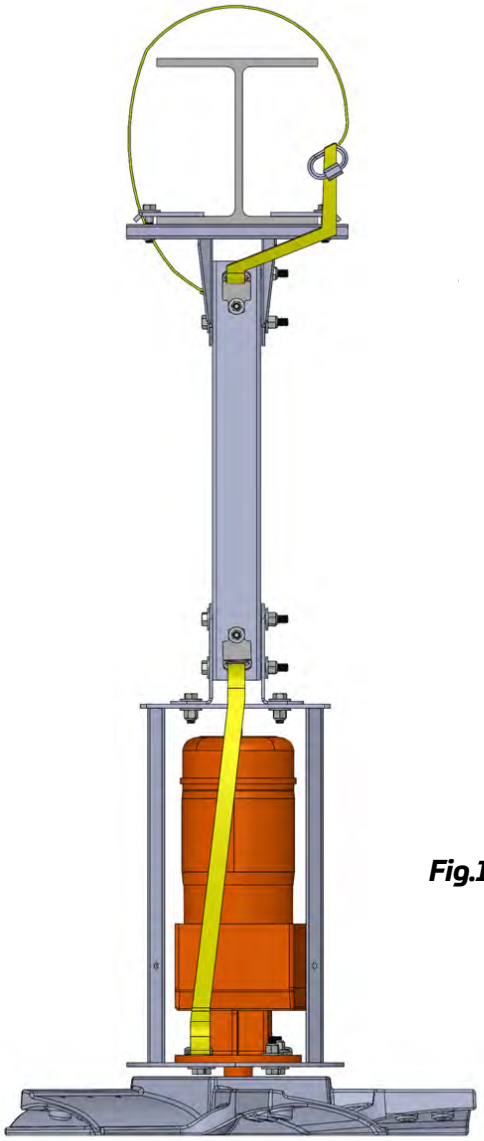

Fig.11

Installing Down Tube, Upper Z-Tech™ SS Safety Strap System, & Lower Yoke Assembly

1. Slide the upper end of the Down Tube (end with the Z-Tech™ SS straps attached) into the Upper Yoke.
2. Loosely fasten the Down Tube into the Upper Yoke by tightening the hardware only enough to engage the nylock nut. This keeps the hardware in place while allowing the self-leveling feature of the Upper Yoke to work for you. Do NOT tighten until the Motor Hub Assembly has been securely fastened to the Lower Yoke on the bottom end of the Down Tube.
3. Position the Upper Z-Tech™ SS straps per Fig. 11, fasten the loops with the connecting shackle or 3/8" quick link provided.
4. Assemble the Lower Yoke onto the bottom of the Down Tube. Tighten hardware to a minimum 40 ft-lbs (54.2 N·m).
5. The Lower Safety Cable will be routed and secured with the Z-Tech™ SS safety strap (see details next page) once the Motor Hub Assembly is secured in place.

3/8" Quick Link

Shackle

6. Z-Tech™ SS Saftey System Makes VividAir the safest fan on the market! Ships with all VividAir orders. A retrofit version is also available for existing fans.

Route upper straps around building support wrapped as tightly as possible and secure with the shackle or3/8" quick link provided.

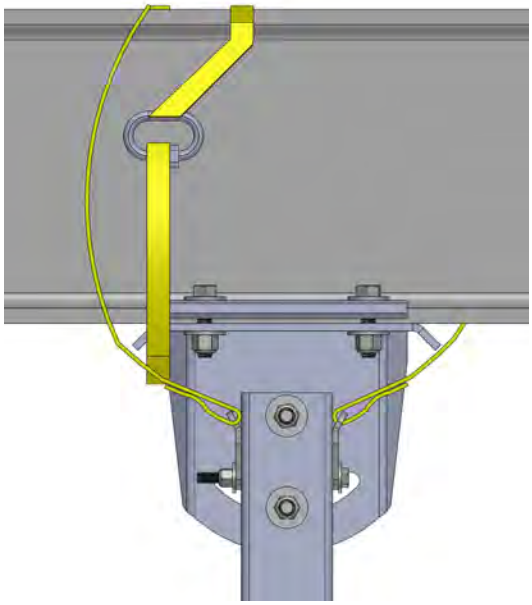

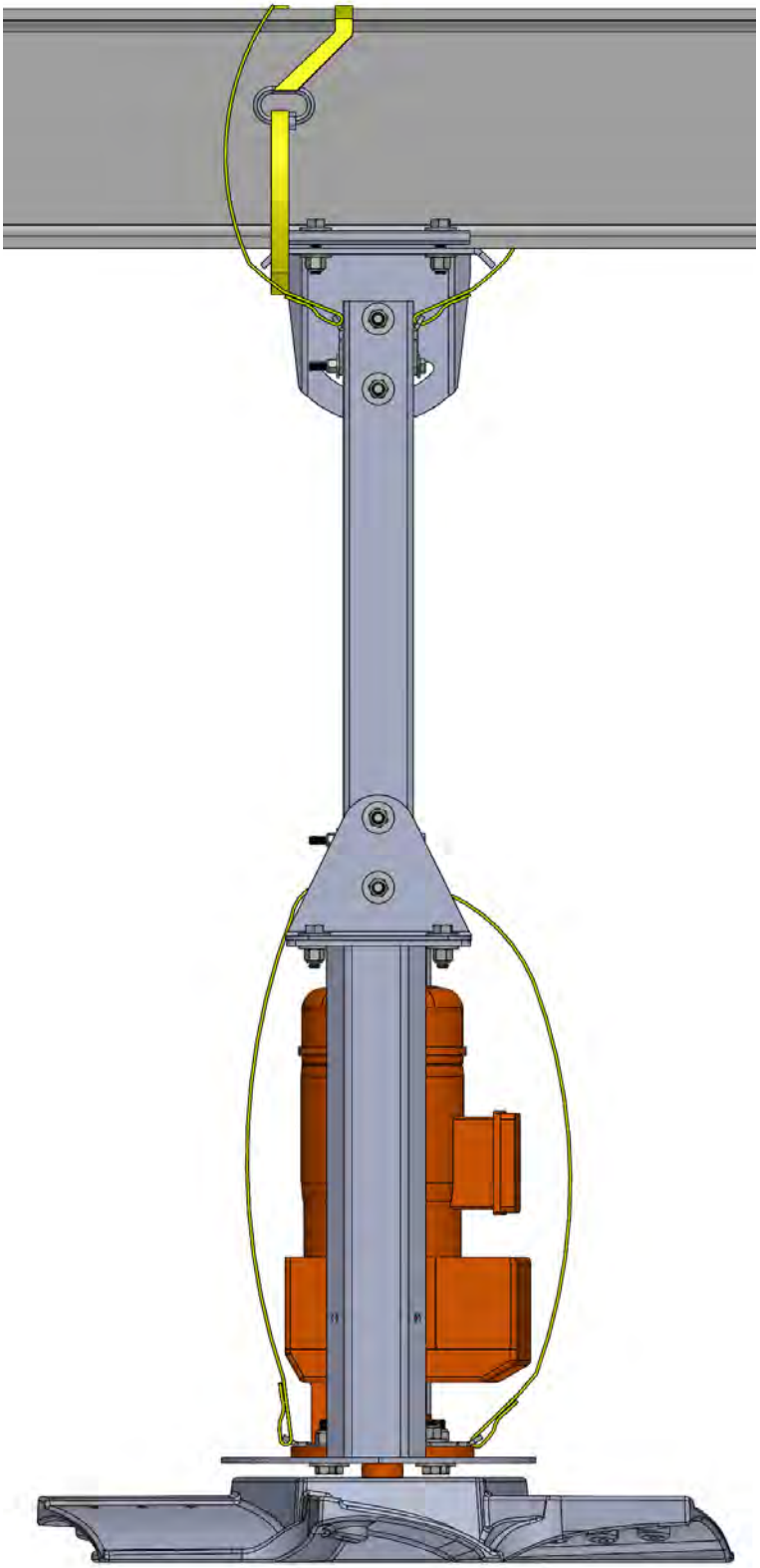

Secure the lower straps to the Down Tube with the hardware provided and tighten to a minimum of 40 ft-lbs (54.2 N .m)

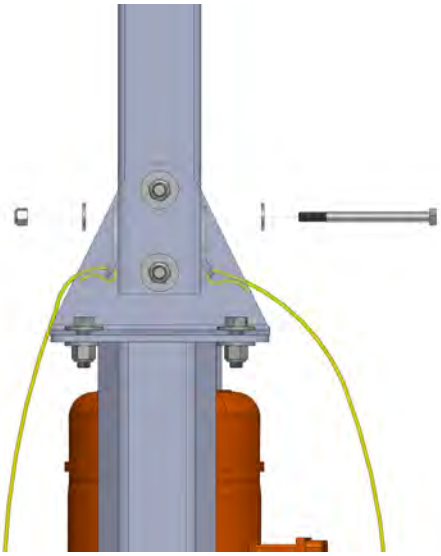

Hardware List:
(1) 3/8" x 5" Grade 8 Bolt
(2) 3/8" Grade 8 Flat Washers
(1) 3/8" x 16 Grade 8 Nylock Nut

6. Main Hub and Drive Assembly

The package includes:

(1) Hub
(1) Fan frame
(1) Motor
(1) Gearbox

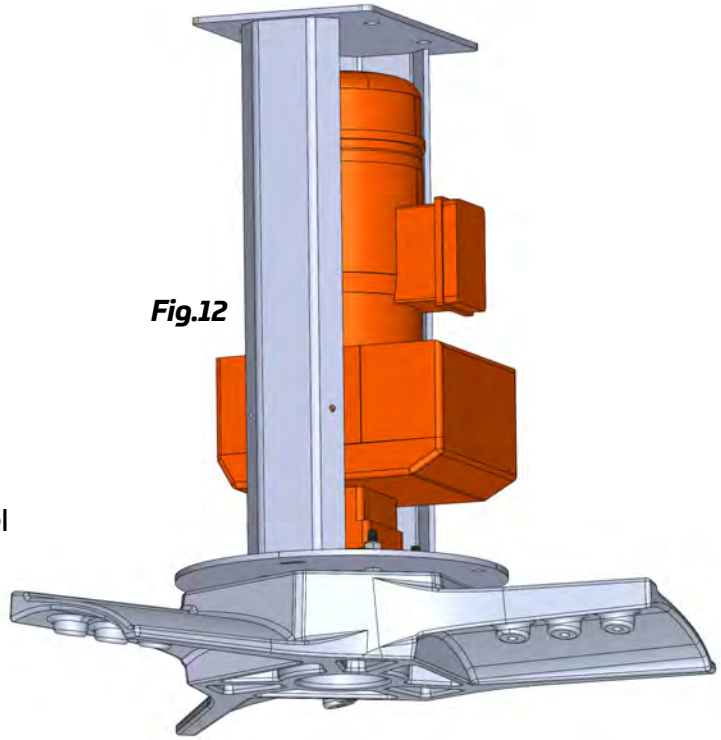

Fig.12

Hardware Pack Includes:

(4) 1/2"x13x1.5" Grade 8 Hex Cap Screw
(8) 1/2" ASTM F436 Type 1 Mechanical Galvanized Steel Structural Flat Washer - Grade 8
(4) 1/2"x13 Grade 8 Steel Nylock Nut

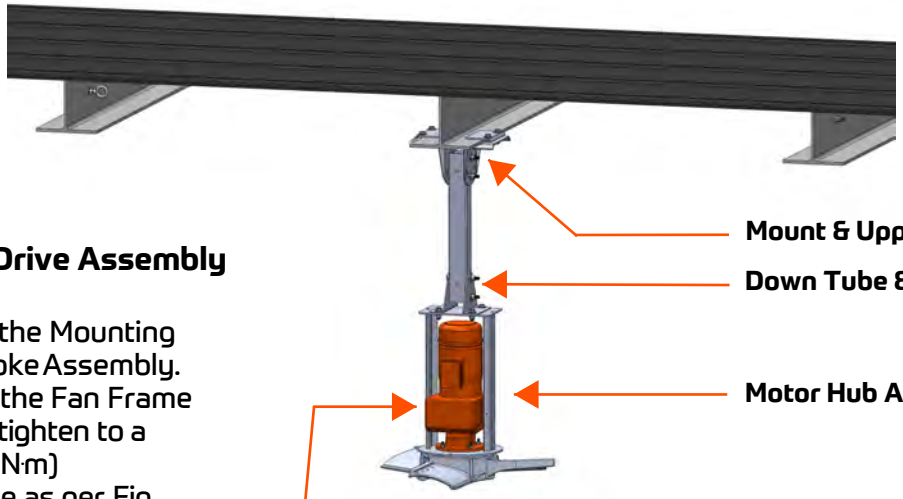

Fig.13

Check fan level by placing the level on the front and side of either vertical post of the fan frame.

Installing the Main Hub & Drive Assembly

1. Raise the fan and align the Mounting Plate with the Lower Yoke Assembly.
2. Fasten the top plate of the Fan Frame to the Lower Yoke and tighten to a minimum 40 ft-lbs (54.2 N·m)
3. Position the safety cable as per Fig. 11. (page #11) and secure with the connecting shackle.
4. Verify fan level by checking both directions on the vertical post of the fan frame.
5. Tighten the Upper Yoke/Down Tube hardware to a minimum 40 ft-lbs (54.2 N·m) to secure the fan level.

7. Required Guy Wires

The package includes:
(4) Cable 1/8" Stainless Steel (4 @ 20 FT provided)
(8) Thimbles 1/4" Stainless Steel
(16) Cable Clamps 1/8" (Use 2 per anchor location)
(4) Turnbuckles 3/8" x 6" 1200# Galvanized eye to eye
(4) Quick Links 3/8"

Contractor Supplied Hardware For Anchor Points:
(4) 3/8" eyebolts (1 1/2" longer than the thickness of the anchor point)
(4) Nuts 3/8"
(8) Washers 3/8"
(4) Nylock Nuts 3/8"

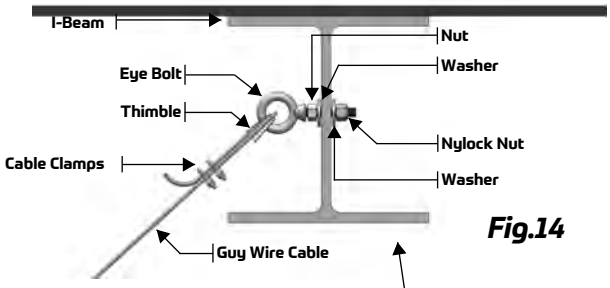

Fig.14

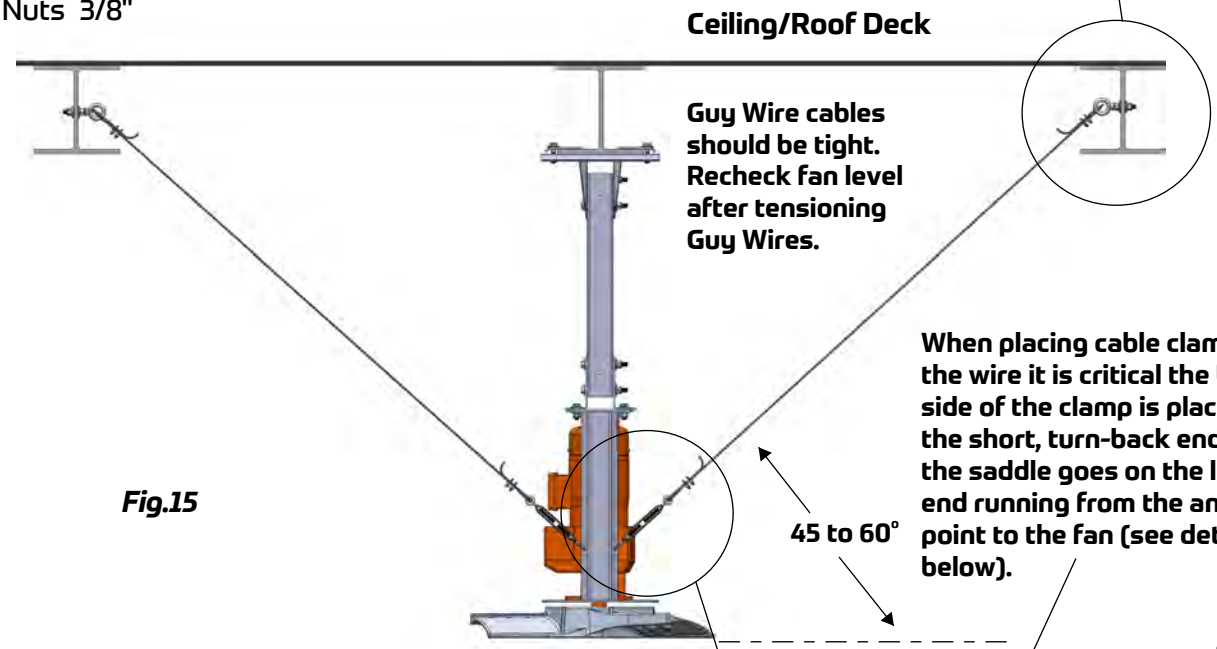

Fig.15

When placing cable clamps on the wire it is critical the U-Bolt side of the clamp is placed on the short, turn-back end and the saddle goes on the long end running from the anchor point to the fan (see detail below).

To the anchor point.

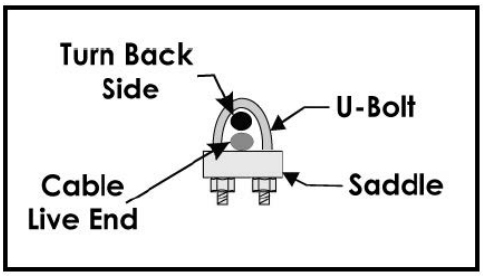

Tighten cable clamp hardware to a minimum 4.5 ft-lbs (6.1 N·m)

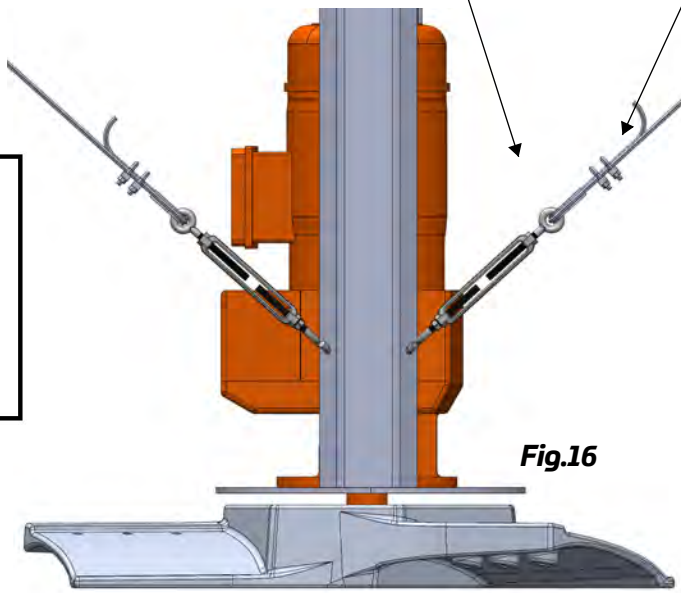
Fig.16

Installing the Guy Wires

1. Determine mounting position on ceiling and establish the angle between 45º-60º for the cable. Determine correct location on the I-Beam to drill the hole for the eye bolt. For example, if the guy wire anchor points on the fan are 3' 4" (101.6 cm) down from the I-Beam or Steel Angles the cables should anchor at least 3' 4" (101.6 cm) away from fan.
2. Install an eye bolt with nuts and washers in I-beam as per Fig. 14.
3. Measure the run of cable required and cut approximately 2 FT longer. NOTE: runs longer than 18 FT will require additional cable. Secure it with 1 thimble and 2 cable clamps (Fig.16).
4. Repeat using the other 3 pieces of guy wire cable, thimbles and cable clamps (Fig.15)
5. Guy wires should be tight. Allow fan to self-level and recheck level as you tighten each guy wire. They should also be approximately 90º apart (Fig.17).

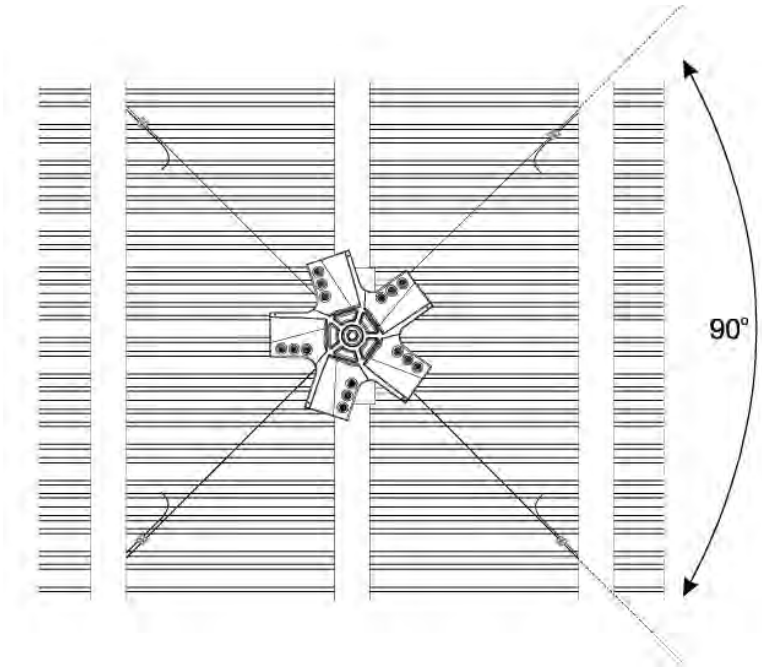

Fig.17

NOTE: Fans hanging lower than 10ft from where the guy wires will mount may require additional cable (provided by the installer).

8. Z-Tech™ Blade Assembly

(3) Blades
(3) Blade Stabilizer Plate
(9) 3/8"x16x3.5" Grade 8 Hex Cap Screw
(18) 3/8"x0.812" Grade 8 Flat Washer
(9) 3/8"x16 Grade 8 Nylock Nut

Installing the Blade Assembly

1. Clamp blade between blade stabilizer plate and hub.
2. Continue until all 3 blades have been fastened and tighten to:
   30 ft-lbs +/-2 ft-lbs
   (40.7 N·m = 30 ft-lbs) or
   (38 N·m to 43.4 N·m)
3. Turn the fan by hand and verify minimum clearance exists for all blades from all obstructions.

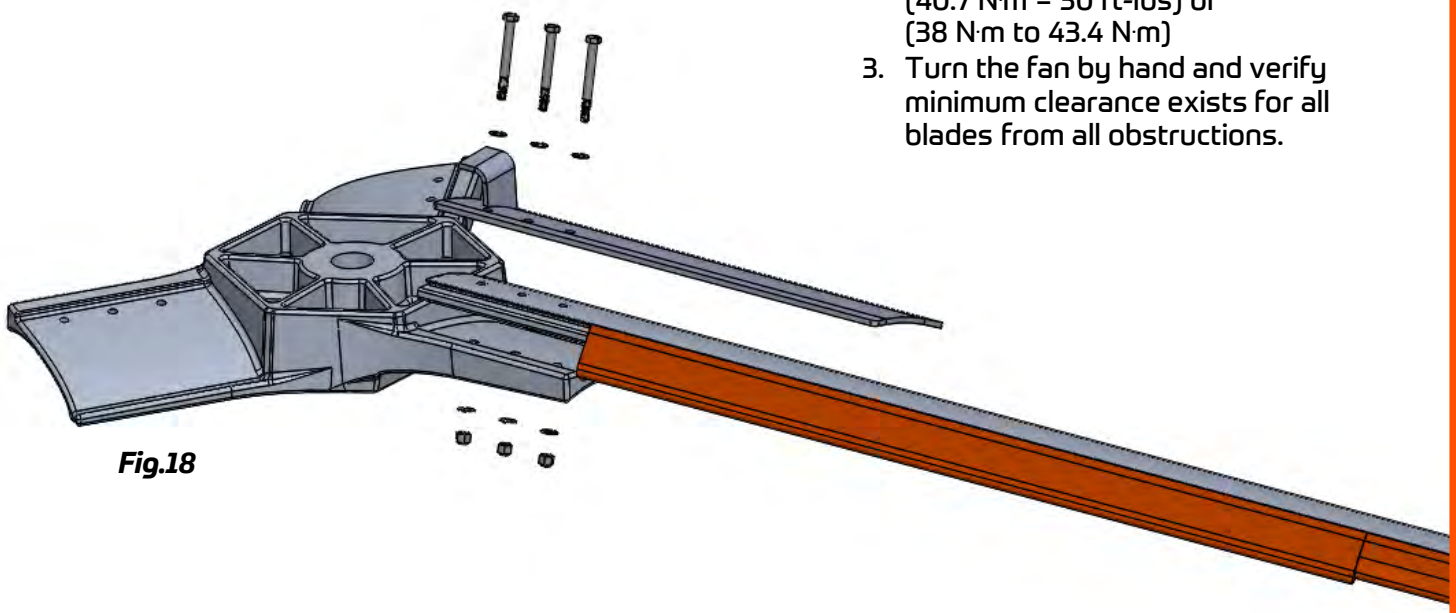

Fig.18

9. Leveling the Fan

1. **After your fan is installed, check the level again by placing your level vertically on the vertical post of the fan frame. Adjust as required.**
2. Once leveled, tighten hardware to a minimum 40 ft-lbs (54.2 N.m) to secure the Down Tube into the Upper Yoke. Verify fan level once hardware is tightened.

Fig.19

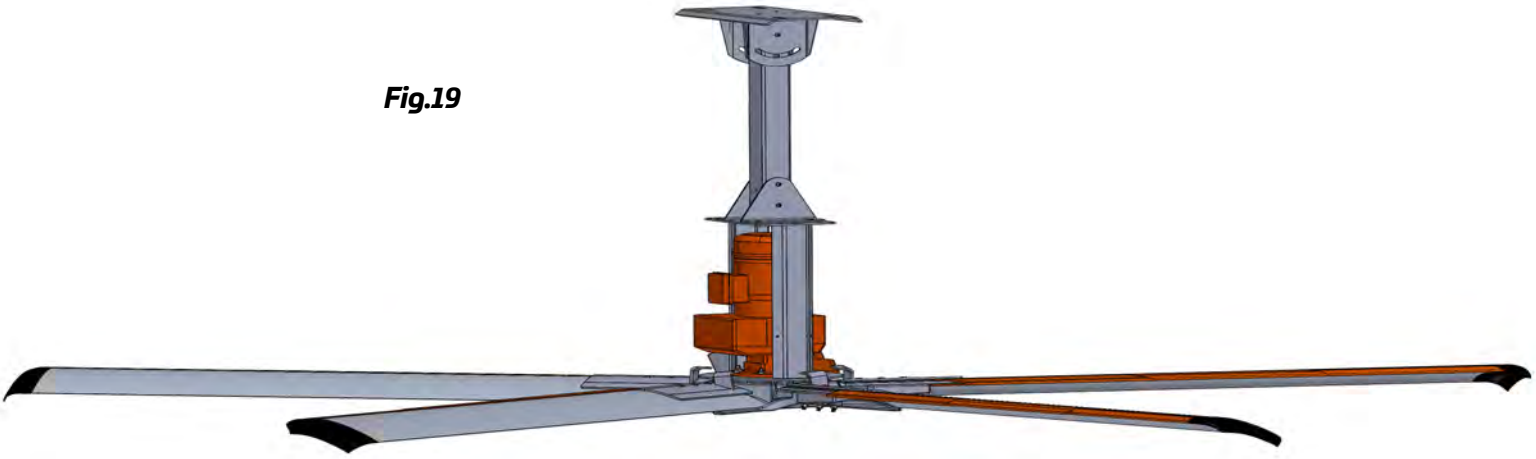

ATTENTION! Optional Motor Gearbox Vent (Z-Tech3 Motors Do Not Have A Motor Vent Plug Standard)

1. Remove rubber stopper from the gearbox
2. Discard after removal.

Failure to remove the vent stopper (if equipped) will cause gearbox failure!!

Dodge Gearbox Vent Plug

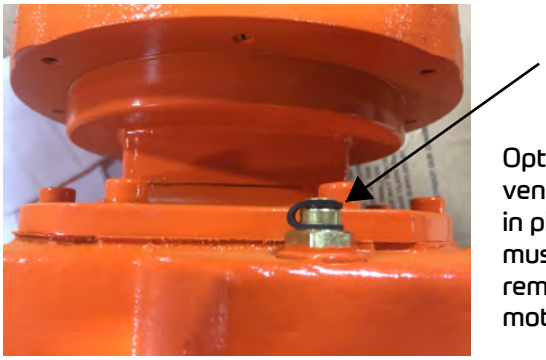

Optional Dodge vent plug shown in place. This must be removed before motor operation.

Optional vent shown with plug removed. Standard Z-Tech3 fans do not have the optional gearbox vent plug. Specials are always possible.

For proper electrical connection, please consult the Wire Connections (Motor) page later in this document.

Electrical Installation & Operation Manual

All installation wiring must confirm to your National Electrical Code and local guides. While we believe that using VividAir controls and following our instructions will result in an installation that meets those requirements, we cannot guarantee it. Code compliance is ultimately the installer's and/or user's responsibility.

Subject to change without notification.

IMPORTANT

Contact VividAir for all outdoor applications and any application where the fan may be hit directly by the wind.

Safety Precautions

- All installations must be installed by a qualified person.
- Do not work on live equipment. Use lock out/tag out procedures.

CRITICALLY IMPORTANT!!

Upon completion of the installation you MUST complete the VividAir Check In/Close Out Form and take two pictures:

1) The overall fan installation.
2) Close up of the fan mount clearly showing both safety cables routed properly, snug, and secured with the hardware provided.

Please send the completed VividAir Check In/Close Out form and pictures to:
drew.keller@vividairmovement.com

Wire Requirements

- VividAir recommends 600v 12 ga stranded wire for all 3 phase VividAir installations.
- VividAir recommends 600v 12 ga stranded wire for all 1 phase VividAir installations.
- Size of input and output wires may go up based on length and current draw of VFD and motor.
- See Power Requirements (page after next) for current draw of VFD and motor.

VFD = Variable Frequency Drive

A separate insulated ground must be provided to each VFD from the electrical panel.

Motor is rated with an Insulation Class F; Ensure proper wiring is used as per current electrical codes.

Wet/Agricultural - PVC Conduit
Dry (Industrial/Commercial) - EMT Conduit

3 Phase = (3) 12g Wires + Insulated Ground 1 Phase = (2) 12g Wires + Insulated Ground

Wet/Agricultural - PVC Conduit
3 Phase = shielded cable, inverter-rated, (3) 12g Wires + Insulated Ground

Dry (Industrial/Commercial) - EMT Conduit 3 Phase = (3) 12g Wires + Insulated Ground

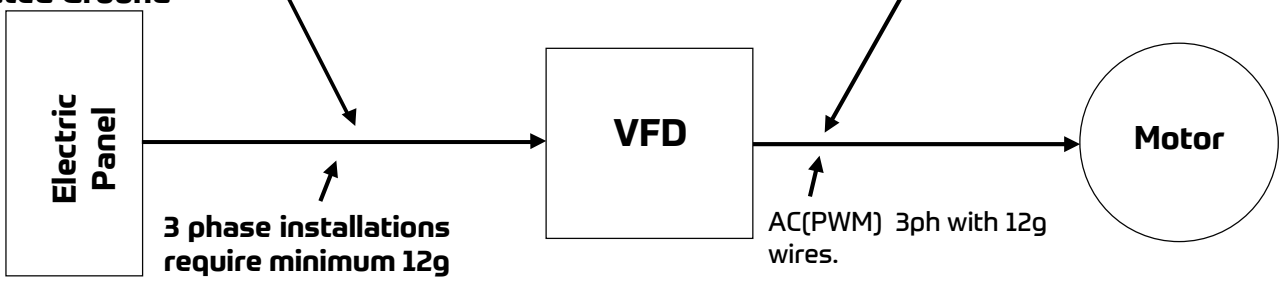

3 phase installations require minimum 12g stranded wire.

Single phase installations require minimum 12g stranded wire.

AC(PWM) 3ph with 12g wires.

NOTE This run MUST be stranded cable. **Do NOT use solid cable.**

Maximum Cable Length

Table. Cable Length Between the VFD and Motor		
200-240 VAC 1 Phase	Max 200 ft	No HP Change
200-240 VAC 3 Phase	Max 200 ft	No HP Change
380-480 VAC 3 Phase	Max 200 ft	No HP Change
500-600VAC 3 Phase	Max 200 ft	No HP Change

If lengths beyond 200' are required the best practice is to order the optional "Remote Mount Keypad Kit". Contact your salesperson or local VividAir representative for more information.

For installations with cable lengths exceeding a 200' run from the VFD to the Motor please consult the factory at: 1-844-GOFANME (463-2663).

If the optional ABB ACS355 VFD is used the data cable connecting the keypad must be removed whenever the ABB VFD Case is opened.

1. Remove the (4) machine screws from the cover.
2. Reach in and press down on the data cable tab and gently unplug the keypad.
3. Remove the cable for the "two tab" strain relief system.
4. Place the cover in a safe location while work is being completed inside the drive.

To replace the cover once work is finished reverse the cover removal process.

1. Lift the cover up to the drive.
2. Being sure to leave enough slack in the data cable engage the "two tab" strain relief system.
3. Gently plug the drive into the keypad. Be sure the cable seats securely.
4. Be sure the cover gasket is properly seated.
5. Fasten the cover with the (4) screws removed.

Power Requirements

	Required Line Circuit Size
24ft Fans	
GFY-Z3-24-460 (24ft fan powered by 380-480V 3 phase) = 2.0 amps	- 10 amp
GFY-Z3-24-230 (24ft fan powered by 200-240V 3 phase) = 4.0 amps	- 10 amp
GFY-Z3-24-240 (24ft fan powered by 200/240V 1 phase) = 12.0 amps	- 20 amp
20ft Fans	
GFY-Z3-20-460 (20ft fan powered by 380-480V 3 phase) = 2.0 amps	- 10 amp
GFY-Z3-20-230 (20ft fan powered by 200-240V 3 phase) = 4.0 amps	- 10 amp
GFY-Z3-20-240 (20ft fan powered by 200-240V 1 phase) = 12.0 amps	- 20 amp
16ft Fans	
GFY-Z3-16-460 (16ft fan powered by 380-480V 3 phase) = 2.0 amps	- 10 amp
GFY-Z3-16-230 (16ft fan powered by 200-240V 3 phase) = 4.0 amps	- 10 amp
GFY-Z3-16-240 (16ft fan powered by 200-240V 1 phase) = 12.0 amps	- 20 amp
12ft Fans	
GFY-Z3-12-460 (12ft fan powered by 380-480V 3 phase) = 2.0 amps	- 10 amp
GFY-Z3-12-230 (12ft fan powered by 200-240V 3 phase) = 4.0 amps	- 10 amp
GFY-Z3-12-240 (12ft fan powered by 200-240V 1 phase) = 12.0 amps	- 20 amp
10ft Fans	
GFY-Z3-10-460 (10ft fan powered by 380-480V 3 phase) = 2.0 amps	- 10 amp
GFY-Z3-10-230 (10ft fan powered by 200-240V 3 phase) = 4.0 amps	- 10 amp
GFY-Z3-10-240 (10ft fan powered by 200-240V 1 phase) = 12.0 amps	- 20 amp
8ft Fans	
GFY-Z3-8-460 (8ft fan powered by 380-480V 3 phase) = 2.0 amps	- 10 amp
GFY-Z3-8-230 (8ft fan powered by 200-240V 3 phase) = 4.0 amps	- 10 amp
GFY-Z3-8-240 (8ft fan powered by 200-240V 1 phase) = 12.0 amps	- 20 amp

Wire Location

- DO NOT RUN input and output power cables in the same conduit.
- DO NOT RUN control cables with any power cables in the same conduit.
- DO NOT RUN different fans output power cables in the same conduit.
- You can run different fans input power cables in the same conduit.

MUST be stranded cable! Do NOT use solid cable.

Input Power

- 3 Ph use L1 – L2 – L3 + PE (Ground)
- 1 Ph use L1 – L2 + PE (Ground)

120VAC - L1 = Hot
- L2 = Neutral

240VAC - L1 = Hot
- L2 = Hot

NOTE: All single phase applications must be wired as 200-240VAC 3 phase applications from the VFD controller to the fan motor. The controller will change the single phase power it is receiving and supply 208-240VAC three phase power to the motor.

ESFR Fire Relay Connection for VividAir Controller

Remove the jumper from pins 4 & 5 and connect the fire alarm relay as shown.

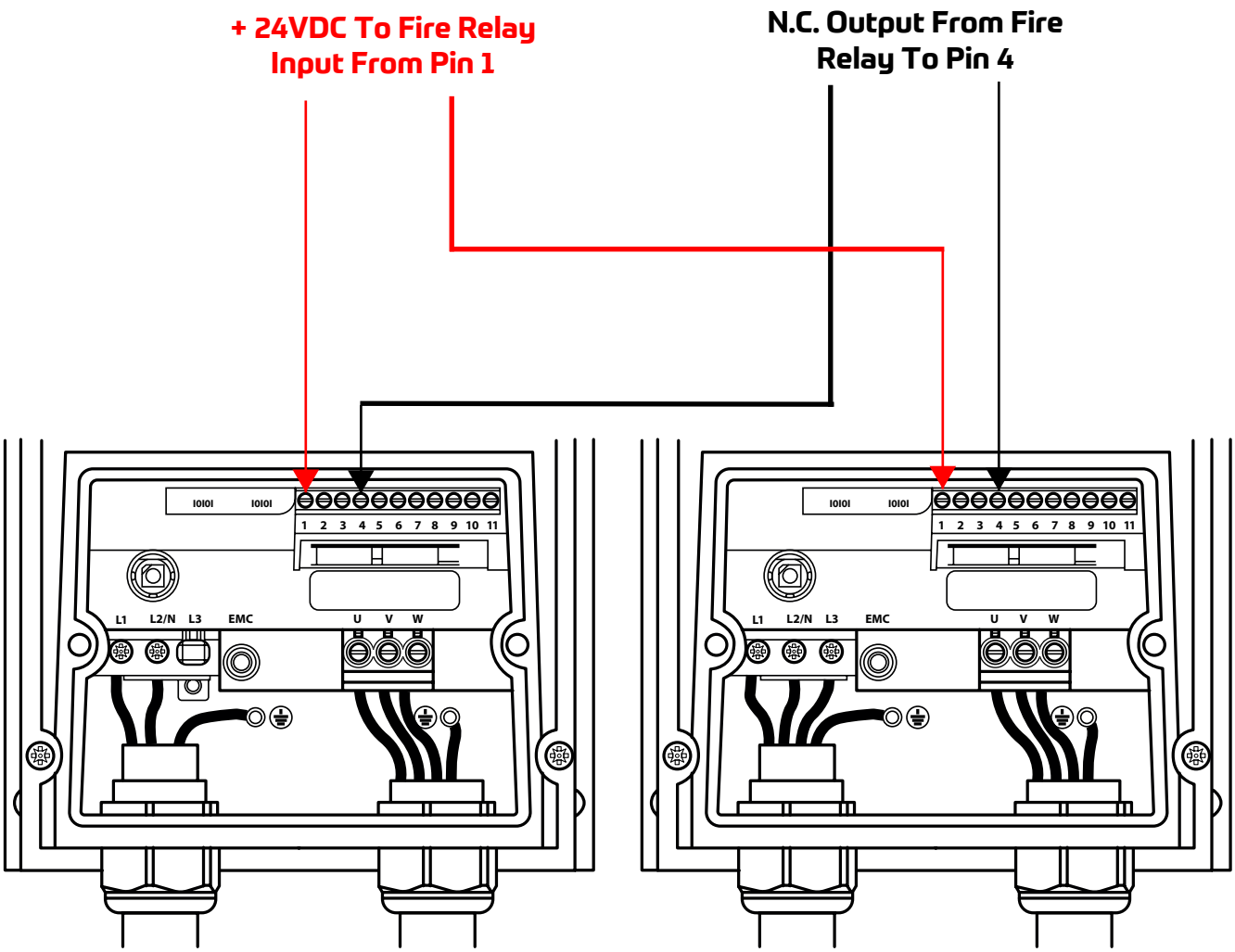

Single phase supply

3 phase supply

Power Wiring Shown For Reference

VividAir Connection For ESFR Suppression System

ASC355 Controller - 200-240VAC & 380-480VAC 3 Phase Applications Only

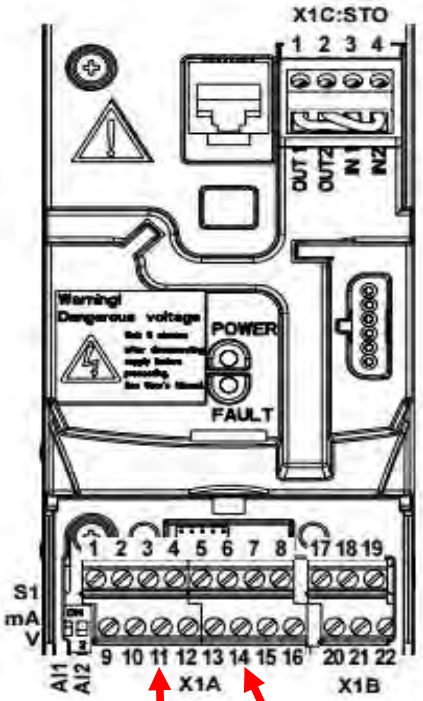

X1A:
1: SCR
2: AI1
3: GND
4: +10 V
5: AI2
6: GND
7: AO
8: GND
9: +24 V
10: GND
11: DCOM
12: DI1
13: DI2
14: DI3
15: DI4
16: DI5 digital or frequency input

X1B:
17: ROCOM
18: RONC
19: RONO
20: DOSRC
21: DOOUT
22: DOGND

X1C:STO
1: OUT1
2: OUT2
3: IN1
4: IN2

S1: Selects voltage or current as the signal types for analog inputs AI1 and AI2.

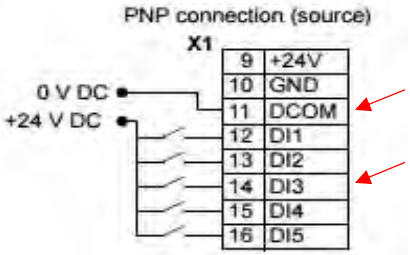

+24 VDC ESFR Digital Input

0 VDC DCOM From ESFR Circuit

1) **Primary Method - The Control is designed to take a PNP (Sourced) +24 VDC signal from an ESFR fire suppression system. The ESFR system will supply the +24V DC power.**
   - **Digital Input "DI3" (POS. 14) = +24V signal wire.**
   - **DCOM (POS. 11) = 0V common signal wire.**
   - **The Drive will go in to an alarm condition when the +24VDC signal is lost. Fan operation is prevented and the Control will stay in the alarm condition until the +24VDC signal is restored.**

2) **Alternate Solution - Run the output from Pin 9 (+24VDC) to a relay and run the output from the relay to Pin 14 (Digital Input 3 "DI3"). Control the relay with the ESFR fire suppression system.**

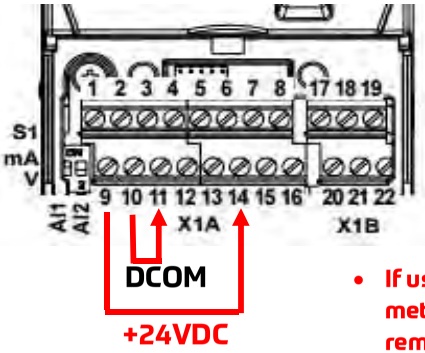

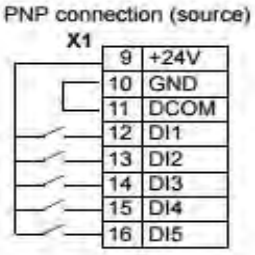

- **If using the primary ESFR connection method above both jumpers must be removed when the ESFR connection is made to the drive.**
- **If using the alternate method only the jumper from Pin 9 to Pin 14 is removed.**

VividAir Connection for ESFR Suppression Systems

ASC250 Controller - 100-120VAC & 200-240VAC Single Phase

This diagram is designed to take a PNP (Sourced) +24 VDC signal from an ESFR fire suppression system. The ESFR system will supply the +24 VDC power.

Run the +24 VDC signal wire to terminal 4 and route 0V COM to terminal 7. There should be room in the terminal block to accept both wires on terminal 7.

To enable the ESFR signal input see the programming steps below. The drive will go into a fault condition once the 24VDC signal is lost and will not allow fan operation until that signal is restored.

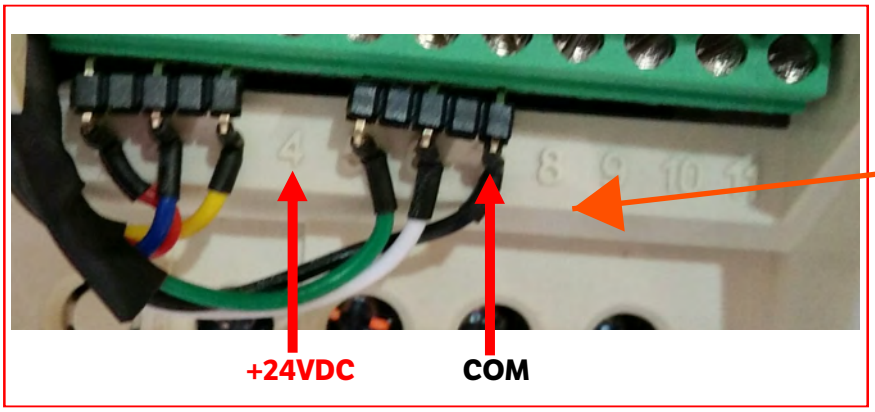

Programming Instructions for ABB ACS255 Controller - Enable ESFR Input

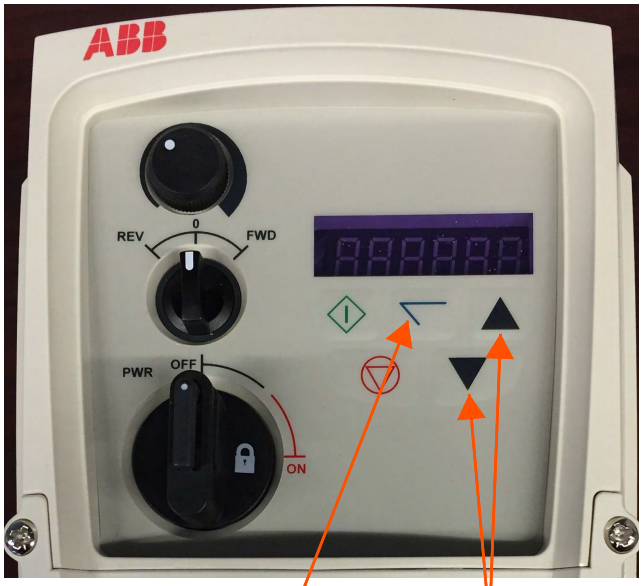

1) Once ESFR connection is complete from fire suppression system. Power up the drive.
   a) Display should say "SToP".
2) Hold "Enter/Select" for 1 second.
   a) Drive will enter programming mode.
   b) PAr S (parameter short list) should be displayed.
   c) Press "Enter/Select".
   d) Display should show 4 digits (they may be "0000").
3) Use Up/Down Arrow Keys and locate parameter 9902.
   a) Press "Enter/Select"to select. Use
4) Up/Down Arrow Keys to change parameter 9902 setting to "6".
   a) Press "Enter/Select"to save.
   b) Display should return to parameter 9902.
5) Press and hold "Enter/Select" until display reads "StoP". You have exited programming mode.
6) Drive will immediately fault if ESFR signal is missing.

Wire Connections (Motor) ABB Baldor Motor

Always wire the motor per the wiring diagram on the inside of the motor cover plate. All single phase applications MUST be connected as "Low Voltage".

Voltage Supply to the VividAir VFD Controller:
380-480VAC 3 Phase Connection:

Connect for "High Voltage"

Voltage Supply to the VividAir VFD Controller:

200-240VAC 3 Phase
200-240VAC 1 Phase Connection:

Connect for "Low Voltage"

Be sure to wire all single phase applications as 200-240VAC three phase applications. The ACS255 controller changes the single phase signal it receives from the panel to 200-240VAC 3 phase.

Low Voltage Wiring	High Voltage Wiring
T1 to T7 and L1 (incoming 200-240 VAC)	T1 to L1 (incoming 480VAC)
T2 to T8 and L2 (incoming 200-240 VAC)	T2 to L2 (incoming 480VAC)
T3 to T9 and L3 (incoming 200-240 VAC)	T3 to L3 (incoming 480VAC)
T4 to T5 and T6 (tie together or mount to a single post)	T4 to T7
T5 to T4 and T6 (tie together or mount to a single post)	T5 to T8
T6 to T4 and T5 (tie together or mount to a single post)	T6 to T9
T7 to T1 and L1 (incoming 200-240 VAC)	T7 to T4
T8 to T2 and L2 (incoming 200-240 VAC)	T8 to T5
T9 to T3 and L3 (incoming 200-240 VAC)	T9 to T6

For all low voltage applications the T4, T5 and T6 wires coming from the motor must be shorted together.

Quick Operations Instructions for the VividAir VFD Controller

Stop/Select Direction:

Both Buttons Disabled

To Change Speed:

- The display will have an "H", indicating "Hertz". The frequency (or speed) the fan is turning will be indicated numerically. H - 45.8 for example.
- The word "STOP" will be shown any time there is power applied to the drive but the fan is not turned on. STOP indicates the fan is on and ready for use.

Quick Operations Instructions for the VFD Controller ACS355 ABB Control

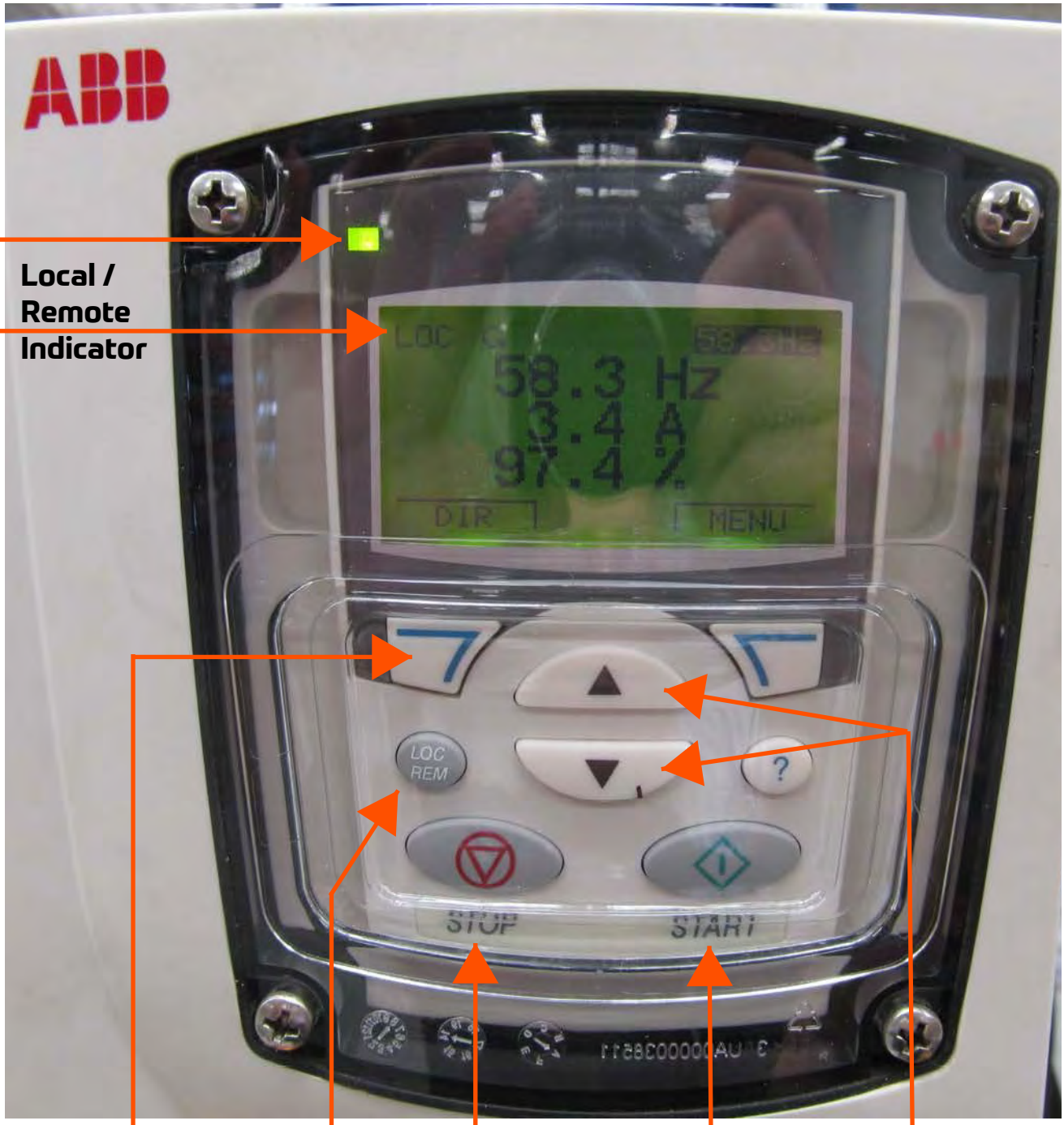

Local / Remote Indicator

To Change Direction:

To Stop:

To Start:

To Change Speed:

Local / Remote - Must be in "Local" for the controller to operate the fan.
Look for "LOC" or "REM" if the upper left hand corner of the display.

The green LED indicator is solid whenever there is no alarm that has not been cleared. If the LED is flashing green it means there is an alarm that has not been cleared. The fan may still operate, depending on the alarm, but the alarm should be investigated and cleared immediately.

Quick Operations Instructions for the VFD Controller ACS255 ABB Control

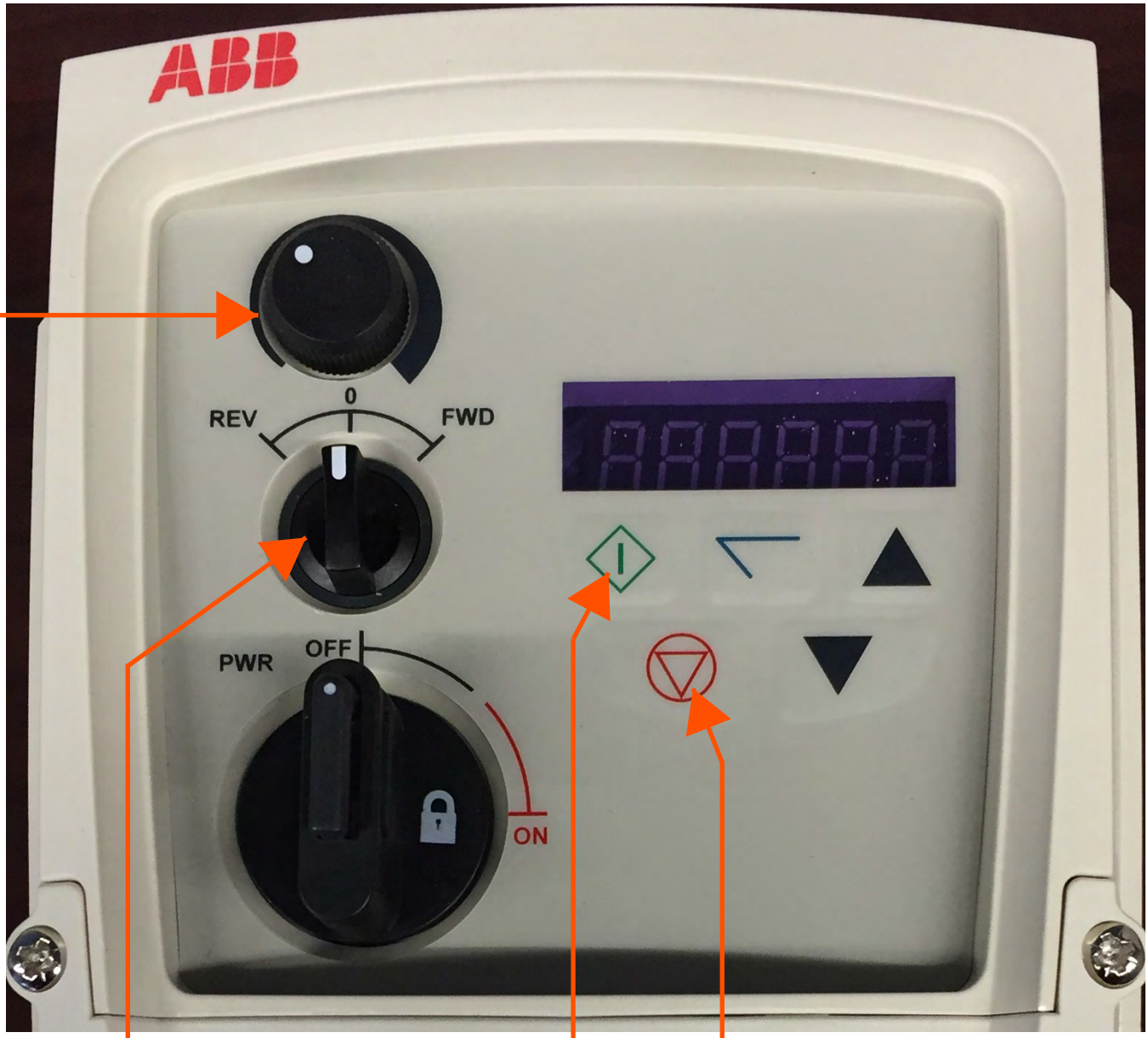

Stop/Select Direction:

Both Buttons Disabled

To Change Speed:

- **The display will have an "H", indicating "Hertz". The frequency (or speed) the fan is turning will be indicated numerically. H - 45.8 for example.**
- **The word "StoP" will be shown any time there is power applied to the drive but the fan is not turned on. StoP indicates the fan is on and ready for use.**

Best Practices for General Fan Operation Using The ACS355 ABB Control

To Turn the Fan On:

- Turn the Lock Out/Tag Out disconnect in the lower left hand corner of the controller to the "ON" position.
    - The disconnect turns fairly hard to avoid accidental movement.
- The ACS355 controller will go through a start up sequence.
- Once start up is complete the fan will show the home screen showing operational parameters:
    - Hz - The value of hertz the variable frequency drive is sending to the motor.
    - A - The amps the fan is drawing.
    - % - The percentage of full speed the fan is currently running.
        - Initially after start up all these values should read "0".

To Start the Fan Spinning:

- Once the ACS355 controller has completed it's start up sequence as detailed above press the "Start" button.
    - This will cause the fan to begin turning in the direction of and at the speed of its last setting when the "Stop" button was pressed.
        - To change speed use the arrow buttons.
            - Look at the number in the upper right hand corner of the display. This shows the Hz value the fan is programmed to run at.
            - Once you see the value of Hz you want the fan to run at release the arrow key.
                - The fan will now ramp up or down to the new setting.
                - The "Hz" display on the fan will show the actual ramp speed of the fan until it reaches the new setting.

To Reverse Direction:

- Simply press the "DIR" soft key as indicated by your quick operations guide in this manual.
    - The fan is programmed to ramp down until full stop is achieved for a split second and then reverse direction and ramp up to the last speed it was running in the new direction.

To Remove Power From the Fan for Service Work:

- Press the stop button and wait for the fan to completely stop.
- Turn the disconnect to the "Off" position and perform Lock Out / Tag Out.

Best Practices for General Fan Operation Using The ACS255 ABB Control

To Turn The Fan On:

- Turn the Lock Out/Tag Out disconnect in the lower left hand corner of the controller to the "ON" position.
- The disconnect turns fairly hard to avoid accidental movement.
- The ACS255 controller will go through a start up sequence.
- Once start up is complete the fan will display "SToP" indicating it is ready for use.

To Start the Fan Spinning:

- Turn the selector switch to "FWD" for cooling operation or "REV" for destratification only operation.
- Adjust the speed of the fan with the dial selector.

To Reverse Direction:

- Simply turn the selector switch to "FWD" or REV" as indicated by your quick operations guide in this manual.
    - The fan is programmed to ramp down until full stop is achieved for a split second and then reverse direction and ramp up to the speed indicated by the dial selector.

To Remove Power From the Fan:

- Turn the selector switch to "0" and wait for the fan to completely stop.
- Turn the disconnect to the "Off" position and perform Lock Out / Tag Out.

Recommended Maintenance Schedule

1. No maintenance shall be done on the fan, mount or guy wires while in operation or powered. Complete Lock Out/Tag Out measures on the fan before work is begun.
2. No maintenance shall be done on the fan controller while powered unless the task involves reprogramming or troubleshooting the electrical system. Complete Lock Out/Tag Out measures on the circuit before work is begun.
3. No maintenance shall be done within a 20ft horizontal radius of the fan and 4ft below and none above the blade level while the fan is in operation.
4. While doing maintenance on the fan, mount, or guy wires, a safety barrier shall be erected at a radius of 20ft of the center of the fan.
5. The fan controller shall be locked out while maintenance is ongoing on the fan, mount, or guy wires.
6. All personnel working on the fan, mount, or guy wires, shall wear the appropriate personal safety equipment as mandated by local, provincial, and national regulations.
7. A risk assessment shall be performed before any work is done. A checklist shall be completed and shall include any emergency contacts for the area.

   CAUTION: Build-up on the Z-Tech3 high-velocity fan blades (dust / grime / dirt / debris) will have potential cause and effect. This could impede the fan's overall speed, this can cause the fan blades to wobble and get out of balance, which can put a strain on the fan's motor. In addition, dust/grime could also build up on the drive train which could be potentially shorten product life. The fan blades/drive train should be cleaned periodically for maximum performance and safety. By avoiding the recommended manufacturer's guidelines and periodic maintenance the warranty is void.

NOTE: Maintenance schedule is based on running 5,000 hrs/year and is a guideline to ensure safe and continuous operation of the fan(s). In cases of extreme operation (e.g. high humidity, aggressive environment, or large temperature variations), shorter intervals between service is recommended.

Safety Precautions

1. Z-TechSS™ Safety System installed per this Z-Tech™ Fan installation manual.
2. Guy wires (if equipped) installed as per Fig. 14, 15, 16 & 17 in this Z-Tech™ Fan installation manual.
3. Blade Stabilizer Plates installed as per Fig.18 in this Z-Tech™ Fan installation manual.
4. See next page for required clearances.
5. If installed in storage facility between racks, signs must be installed identifying fan locations.
6. The VividAir variable frequency drive has several safety features such as current limit, motor overload, minimum, maximum and ramp speed control. The controller also features a LOTO disconnect all housed within a NEMA 4X enclosure.

Z-Tech™ Fan Clearance Requirements

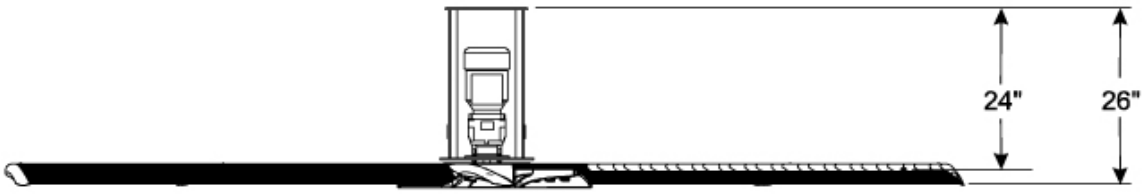

Fan Frame Detail

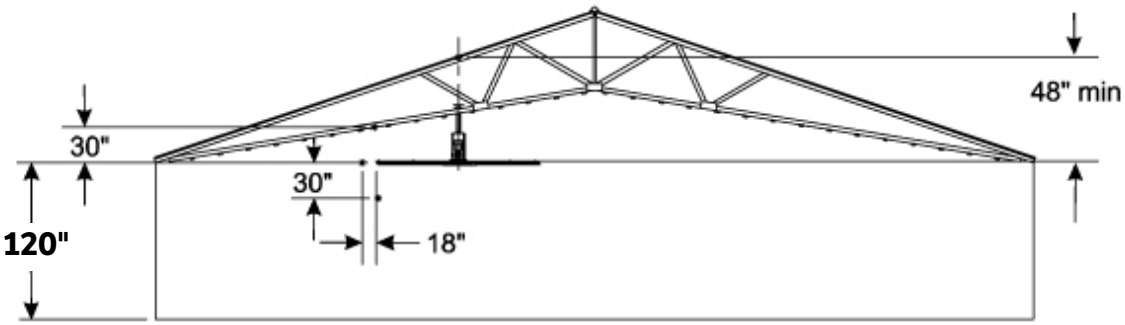

Sloped Roof

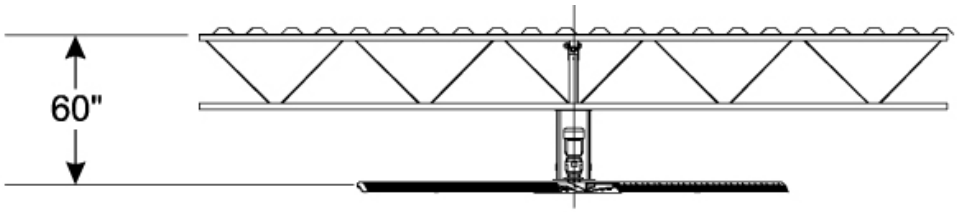

Flat Roof

Clearances

- Min 60" center of fan to roof deck for ideal operating performance without compromising overall fan performance
- Min 24" from fan blade's leading edge to obstruction above or below fan
- Min 18" from side of fan to any obstruction
- Min 120" floorto fan leading edge height

Contractor is responsible for verifying all site conditions to include field dimensions where applicable. If the contractor elects to make any changes without notifying VividAir the contractor is responsible for the same. All drawings are to be used as general architectural intent unless otherwise stamped. See Engineer drawings for structural design information. Contractor to ensure that all building departments and authorities are informed in regard to the work and that all permits are attained before commencing work.

VIVIDAIR Annual Performance Plan

We're here to help you keep your warranty active and protect your air movement investment!

Certified Services Performed

1) Integrity of safety system.
2) Verify blade connection.
3) Inspect hub, blades and Z-Tech™ leading edges for proper operation.
4) Inspect VividAir VFD parameters and performance.
5) Check fault log and record if any are reported.
6) Check ABB/Baldor motor performance & operation
7) Check Dodge gearbox performance & operation including breather (if equipped).
8) Integrity of electrical connections.
9) Check fan mounting structure and fan level and plumb.
10) Verify hardware connections.
11) Verify guy wire tension and inspect cables and connections (if equipped).
12) Visual inspection of equipment.
13) Enhance VividAir equipment by adding Z-Tech™SS retrofit (Z-Tech™, Z-Tech3™, Z-Chill™ only).
14) Document any customer observations.
15) And we even clean the fan!

It's EASY!!

1) Request a quote from VividAir for your Annual Performance Plan: info@gofanyourself.com
2) Approve the Annual Performance Plan Quote and return to VividAir
3) VividAir will contact you to schedule your Performance Plan
4) Check it OFF your To-Do list
5) Peace of MIND!

VIVIDAIR
ANYTHING ELSE IS STALE

VIVIDAIR ANNUAL PERFORMANCE PLAN CHECKLIST REQUIRED TO MAINTAIN YOUR WARRANTY

Email completed form and pictures to: drew.keller@vividairmovement.com

VividAir
1032 National Parkway
Schaumburg, IL 60173
1-844-GOFANME (463-2663)
1-847-648-4920
www.vividairmovement.com

Company: _____

Address: City/ _____

State/Zip: _____ **Contact Name:** _____

Email: _____ **Phone:** _____

The performance plan outlined below will be completed on VividAir large diameter ceiling mount fans annually: Fan(s) Number or Location: _____

- ☐ 1) Visual inspection of fan. (look for any sign of damage or unusual wear)
- ☐ 2) Check fan mounting structure and fan level and plumb.
- ☐ 3) Verify hardware connections.
- ☐ 4) Verify guy wire tension and inspect cables and connections. (if equipped, guy wires should be snug)
- ☐ 5) Inspect hub, blades and **Z-Tech™** leading edges. (look for any sign of damage or unusual wear)
- ☐ 6) Verify blade connection. (blade hardware to be torqued to 30 ft lbs +/- 2 ft lbs)
- ☐ 7) Check Integrity of safety system. (hardware is tight, straps show no signs of wear)
- ☐ 8) Check gearbox performance & operation including breather (if equipped). (fan should turn easily by hand in both directions - no unusual noises or interruptions of smooth travel)
- ☐ 9) Check Integrity of electrical connections. (wire discoloration often means excess heat)
- ☐ 10) Check fault log and record any reported faults. Check motor performance & operation.
- ☐ 11) Document any observations with pictures and in "Notes" below.
- ☐ 12) Clean the fan with a mild detergent and/or clean water.

Take pictures and send to VividAir along with this checklist(s) of the fan from the floor and close-ups showing **Z-Tech™** SS properly installed at the motor/hub assembly and at the upper yoke weldment.

Notes:

Scan me

VividAir Annual Performance Plan Record

Fan Location:
Fan Diameter:
Motor Serial Number:
Motor Size:

Fan Location:
Fan Diameter:
Motor Serial Number:
Motor Size:

Fan Location:
Fan Diameter:
Motor Serial Number:
Motor Size:

Fan Location:
Fan Diameter:
Motor Serial Number:
Motor Size:

Fan Location:
Fan Diameter:
Motor Serial Number:
Motor Size:

Fan Location:
Fan Diameter:
Motor Serial Number:
Motor Size:

Date	Mechanic Signature	Date	Mechanic Signature	Date	Mechanic Signature

Date	Mechanic Signature	Date	Mechanic Signature	Date	Mechanic Signature

Date	Mechanic Signature	Date	Mechanic Signature	Date	Mechanic Signature

Date	Mechanic Signature	Date	Mechanic Signature	Date	Mechanic Signature

Date	Mechanic Signature	Date	Mechanic Signature	Date	Mechanic Signature

Date	Mechanic Signature	Date	Mechanic Signature	Date	Mechanic Signature

Date	Mechanic Signature	Date	Mechanic Signature	Date	Mechanic Signature

Date	Mechanic Signature	Date	Mechanic Signature	Date	Mechanic Signature

ACS355 CONTROL TROUBLESHOOTING

Troubleshooting Tips:

- If possible, swap the VFD control with another fan to isolate the problem.

  Test the VFD Control:
- Remove power at the breaker supplying the control and perform Lock Out / Tag Out procedures.
- Disconnect the output power wires running from the VFD to the Fan Motor.
- Remove LOTO and restore power to the VFD.
- Turn the VFD on and watch for the proper start up sequence.
  - "ABB" screen comes up for a few seconds.
  - Fan "home" screen comes up showing fan performance.
- Operate the VFD as if the fan were connected.
  - The VFD should work normally as the screen indicates VFD output, not fan operation.
    - ➢ If the VFD does not operate properly or faults/alarms are triggered the VFD should be replaced.

Test the Motor Housing Assembly:

- Turn the fan off at the VFD Control and perform Lock Out / Tag Out procedures.
- Turn the fan by hand in both directions. The fan should turn easily in both directions. If it does not observe:
  - Look for any mechanical interference between the blades/hub and the fan frame.
  - Feel for grinding, the movement of the fan should be smooth and quiet.
  - Listen for grinding or any metal on metal contact.
- The VividAir gearmotor is a motor and gearbox. Anything that looks or sounds other than you'd expect from a motor and gearbox is a likely indication of a problem. The Motor Housing Assembly should be replaced.

1) Depending on the fault received they may be two different reactions from the keypad LED:
   a) Flashing Green indicating either:
      i) Fire Alarm signal is currently being received and preventing the fan from operating.
      ii) Minor fault that did not require the fan to shut down but requires an operator reset.
         1) In this case the soft key "DIR" to reverse direction will change to "RESET".
            a) Once "RESET" is pushed the fault will clear and the LED will return to solid green.
            b) A record of this fault may be retrieved from the "Fault Logger".
   b) Solid Red indicating the alarm shown on the screen caused the fan to shut down.

Alarm 2023 "Emergency Stop" is shown below. This is caused by the Fire Alarm input. The LED will be Flashing Green.

Flashing Green LED

A "Fire Alarm" activation will read "Emergency Stop" and will stay active until the input from the alarm system is removed. This screen will toggle with the Home Screen showing Hz, Amps, and % of speed all reading zero.

You can create this alarm for testing purposes by removing the jumper running from terminal position 9 to 14.

Both jumpers must be removed once the Fire Alarm connection is made.

ACS355 CONTROL TROUBLESHOOTING

To retrieve or review a Fault:

1. Press "MENU" from the home screen.

2. Once in the Main Menu arrow to " Fault Logger".

(The list will start with the last menu selected. In this case "PARAMETERS". Arrow down to "FAULT LOGGER".

3. Press "Enter" to select "FAULT LOGGER".

ACS355 CONTROL TROUBLESHOOTING

4. Review the list of faults. The list is organized with the most recent fault at the top.

Press "DETAIL" to see additional information about the fault selected.

5. Arrow up and down to see the desired information.

Hit the "DIAG" button for troubleshooting tips. These tips assume the drive and fan have been operating successfully and do not pertain to common installation faults in most cases.

6. Arrow up and down to review the diagnostic information and troubleshooting tips.

Press "Exit" to leave the diagnostic information.

ACS355 CONTROL TROUBLESHOOTING

2001 - Output current from the drive to the motor has exceeded the trip level.

- Check the integrity and connections of the motor power wires running from the drive to the fan.
- Verify drive input voltage is grounded on the "PE" terminal lug and the motor power voltage is grounded to one of the "Ground" terminal lugs.
- Spin the fan by hand. It should move freely in both directions.
    - If you cannot spin the fan by hand the motor may be seized up and must be replaced.
    - If the fan moves easy in one direction and much more difficult in the other direction the motor must be replaced.
- Motor may be nearing the end of it's useful life. All motors may draw more current as they age. This motor may be gradually failing to the point of drawing more current than the drive can supply. It must be replaced.

2002 - Input voltage has too much noise and must be conditioned in front of the drive.

- Place a commercial line reactor on the input power wires supplying the drive.
- Verify drive input voltage is grounded on the "PE" terminal lug and the motor power voltage is grounded to one of the "Ground" terminal lugs.

2003 - Input voltage trouble.

- Most common problem is a dropped phase of the 200-240 3 phase or 380-480 3 phase line voltage.

2006 - Control signal is not being received by remote drive.

- This fault message should only be possible when your application is controlling multiple drives (fans) from a single keypad. When controlling drives remotely from another keypad the signal from the controlling keypad is sent through a wired connection to the remote drive. This signal is not being received.
- Check the wire connections in the terminal blocks of the drive with the fault code and the previous drive in line.
- Check the integrity of the low voltage control wire connecting the drives.

2008 - Drive has lost communication with the keypad.

- Swap keypads with another drive to isolate the fault.
    - The keypad connector is fragile. Take care when breaking and making the connection.
- Verify keypad wire integrity.
    - Use a spare data cable to isolate if it's the cable or the output from the drive.

2026 - Input phase loss.

- Line voltage supply to the drive has dropped a phase.

See the ACS355 manual you received with your fan shipment for greater details.

ACS255 CONTROL TROUBLESHOOTING

Symptom	Troubleshooting Steps
Fan Turning Wrong Direction	For cooling (forward) operation the stepped edge of the blade should be the leading edge. When running in destratification only (reverse) mode the stepped edge of the blade should be trailing. You will feel no (or very little) airflow when the fan is running in reverse. Reverse two of the phases either at the control or at the motor to reverse fan direction.
Fan Will Not Start	1) Turn off the fan at the LOTO Disconnect on the face of the drive. 2) Wait ten seconds. 3) Reapply power and watch the drive go through it's normal start up sequence. a) ABB shows on the screen for a few seconds. b) Fan stats ("H" Hertz, "A" Amp Draw, "%" Speed) 4) If control boots up properly and fan will not turn remove power from the drive and turn the fan by hand in both directions. Fan should move easily in both directions. 5) Check power connections in all locations of the drive and motor. 6) Be sure input power in the drive is grounded to "PE" and output power from the drive is grounded to either of the two ground terminals next to "PE".
Fan Wobbles During Operation	Fan mounting structure is not rigid enough to support normal fan operation. Verify the fan is not being exposed to external air movement. Verify proper Guy Wire installation.

Fault Code	No.	Description	Corrective Action
STOP	0x00	Drive is READY and in a stopped condition. The motor is not energized. No enable signal is present to start the drive.	
F0001	0x03	Instantaneous Over current on the drive output. Excess load or shock load on the motor.	**Fault occurs immediately on drive enable or run command** Check the output wiring connections to the motor and the motor for short circuits phase to phase and phase to earth. **Fault occurs during motor starting** Check the motor is free to rotate and there are no mechanical blockages. **Fault occurs when motor operating at constant speed** Investigate overload or malfunction. The motor may be nearing the end of it's useful life. All motors draw more current as they age. This motor may need to be replaced.
F0004	0x05	Hardware Over Current	Check the wiring to motor and the motor for phase to phase and phase to earth short circuits. Disconnect the motor and motor cable and retest. If the drive trips with no motor connected, it must be replaced and the system fully checked and retested before a replacement unit is installed.
F0014	0x0B	External trip (on digital input 3)	ESFR Fire Relay circuit is tripped. See the Installation and Technical Specifications Guide for additional information including required programming.
	0x0E	Input phase loss trip	Drive intended for use with a 3 phase supply has lost one input phase.
F0006	0x07	Under voltage on DC bus	The incoming supply voltage is too low. This trip occurs routinely when power is removed from the drive. If it occurs during running, check the incoming power supply voltage and all components in the power feed line to the drive.

See the ACS255 manual you received with your fan shipment for greater details.

ACS255 CONTROL TROUBLESHOOTING

Troubleshooting Tips:

Test the VFD Control:

- Remove power at the breaker supplying the control and perform Lock Out / Tag Out procedures.
- Disconnect the output power wires running from the VFD to the Motor.
- Remove LOTO and restore power to the VFD.
- Turn the VFD on and watch for the proper start up sequence.
- Operate the VFD as if the fan were connected.
    - The VFD should work normally as the screen indicates VFD output, not fan operation.
        - If the VFD does not operate properly or faults/alarms are triggered the VFD should be replaced.

Test the Motor Housing Assembly:

- Turn the fan off at the VFD Control and perform Lock Out / Tag Out procedures.
- Turn the fan by hand in both directions. The fan should turn easily in both directions. If it does not observe:
    - Look for any mechanical interference between the blades/hub and the fan frame.
    - Feel for grinding, the movement of the fan should be smooth and quiet.
    - Listen for grinding or any metal on metal contact.
- The VividAir gearmotor is a motor and gearbox. Anything that looks or sounds other than you'd expect from a motor and gearbox is a likely indication of a problem. The Motor Housing Assembly should be replaced.

The image below shows a control during normal fan operation.

The "Enter/Select" and "Up/Down Arrows are disabled during normal fan operation. They become active only when the fan enters "Programming Mode".

ACS255 CONTROL TROUBLESHOOTING

1. Press "Enter" and hold for 1 second until the "Parameters" screen appears. "PAr L" or "PAr S" will be displayed.
2. To observe the last recorded fault enter the "long" parameter list.
3. Use the arrows to toggle between the long and short parameter list.

PAr L = Long Parameter List
PAr S = Short Parameter List

See ACS255 Manual for Greater Detail

4. Default parameter setting shown. Press the up arrow to move to parameter set 0401.

5. Parameter set 0401 details the last fault recorded by the drive. The ACS255 only records the last fault created.

6. Press "Enter" to see the last fault.

Last recorded fault displayed. Common faults listed at the start of this section. Reference the ACS255 manual for additional faults and details on the cause and troubleshooting tips.

Press "Enter" for longer than 1 second to return to the home screen.

Limitation of Warranties and Liabilities

Twelve Year Limited Warranty

VividAir Z-Tech™ 3 Blade Fans are of industrial grade construction and should provide many years of service provided routine maintenance is completed as scheduled. Warranty duration is as follows:

a)	Blades	Lifetime Warranty (Limited to 5 Years Beyond the Last Date of Manufacture)
b)	Aluminum Alloy Hub	Lifetime Warranty (Limited to 5 Years Beyond the Last Date of Manufacture)
c)	Motor	12 year Limited Warranty (5 Years with Non-Factory Certified Installation)
d)	Gear Reducer	12 year Limited Warranty (5 Years with Non-Factory Certified Installation)
e)	VFD Control Panel	12 year Limited Warranty (5 Years with Non-Factory Certified Installation)
f)	Labor	1 year Limited Warranty (pre-approved)
g)	Custom Fan Wraps/Paint	1 year Limited Warranty

Go Fan Yourself® warrants that this product will, under normal use and service as specified by Go Fan Yourself,® operate properly and be free of defects in materials and workmanship for a period of three years from the date of purchase by customer. The term "operate properly" in this context applies to mechanical, electrical and structural functions only. No guarantee, unless and except by separate written agreement, is made regarding dimensions of air movement generated or the effectiveness of this product for its intended purpose.

Labor warranty will cover all reasonable costs paid by the customer to an independent contractor (including dealers) to remove, dismantle, reassemble or reinstall any of the warranted Products during the first year that the Product is in service. All receipts are to be submitted to Go Fan Yourself® which will be paid upon completion of the installation of the Product and after the return of the failed unit. Go Fan Yourself® will only issue a credit/check to the customer/dealer and will not be held responsible for paying the independent contractor.

Warranty Exclusions

Please note that the following may or could void any or all of the above listed warranties.

- Not following required installation procedures as in installation guide and all other documentation supplied with the fans and related equipment supplied by manufacturers of individual fan and control components.
- Not following all relevant codes and ordinances, not limited to National Electrical Code, provincial, or state and local building codes.
- Not following electrical engineering industry standards regarding approved method of installing solid-state electrical equipment having characteristics of fans and all components included in this
- product. Any modification to installation, product, controls without written authorization from Go Fan Yourself,® even if attempting to diagnose and/or repair a problem.
- Misuse, abuse, accidents, unreasonable use, or Acts of God.
- Incorrect electrical current, voltage or supply.
- Running fans at higher than recommended speeds.
- Re-setting parameters of any control without prior approval from Go Fan Yourself.®
- Failure to use all installation and mounting hardware supplied by Go Fan Yourself.®
- Failure to perform periodic maintenance as detailed in the Z-Tech3™ Fan Installation Guide.

Limitation of Warranties and Liabilities

Twelve Year Limited Warranty

Go Fan Yourself® reserves the right to make the final determination, based on its own evaluation of the components as to whether:

- The problem in question is the result of a defect in design, workmanship or materials and not the result of error, misuse or abuse on the part of the customer as stated above.
- Whether the problem or defect is material and requires action under this warranty.
- Whether the remedy of repair or replacement is appropriate.

Go Fan Yourself ® will not be responsible for remedial work necessary to correct installation procedures that do not conform to those established by the instructions, codes and standards, regardless of when the installation occurred.

With regard to electrical and electronic components provided by Go Fan Yourself® that comprise part of the products, including motors, motor drives and variable frequency drives, Go Fan Yourself® relies on the determination by the original manufacturer as to whether the failure of such components was the result of a defect. If the manufacturer of such components determines that there was no defect and therefore refuses to cover it under warranty, Go Fan Yourself® likewise will not warranty such item unless Go Fan Yourself ® determines that the failure of such electrical or electronic component
was the result of a defect of design, workmanship or material within some other part of the products.

Warranty Duration

With respect to replacement or repair rendered, Go Fan Yourself® warrants that the parts replaced or repaired will operate properly and be free from defects in materials and workmanship for a period of 90 days from the shipment date of the replacement products to the customer or for the remainder of the original warranty period, whichever is longer.

Warranty Claim Instructions

1. Contact your original dealer/salesman of the purchase when you first notice problem with the product.
2. It will be the responsibility of the dealer or salesman to assist the customer in determining what component is causing the problem.
3. If they cannot diagnose the problem, they are to contact Go Fan Yourself ® with all the necessary information.
4. The appropriate department will then be in contact with the customer to determine the cause of the problem.
5. Once diagnosed, attain pre-authorization from Go Fan Yourself® for any costs covered by the 1 year labor warranty.
6. Submit a Purchase Order for a replacement unit complete with price.
7. A replacement unit will be shipped out upon receipt of the PO. This PO allows for an order to be established in the Go Fan Yourself ® system.
8. Once the units have been changed over, submit all pre-authorized costs to Go Fan Yourself® for payment.
9. No credits or checks will be issued until all original products are received back at Go Fan Yourself® and warranty statue can be verified or unless Go Fan Yourself ® directs otherwise.

Limitation of Warranties and Liabilities
Twelve Year Service Life Prorated Warranty

WARRANTOR: The warrantor for the limited warranties set forth herein is Go Fan Yourself®("Company")

LIMITED WARRANTY: This prorated limited warranty (this "Warranty") applies only to the original End-User (the "End-User") of any Go Fan Yourself® Ceiling Fan(s) (Individually and collectively, the "Product") and cannot be transferred. This Warranty applies even in the event that the Product is initially sold by Company for resale to End-User. This Warranty applies to U.S. and Canada purchases only. Outside U.S. and Canada; standard Three-Year Warranty applies.

WHAT THIS WARRANTY COVERS: In addition to the Lifetime Warranty on blades, hub and frame; and the standard Three-Year Limited Warranty covering all other components, the Warrantor warrants that the product will have a service life (defined below) of Twelve Years from the date of purchase (the "Twelve Year Service Life") when used in accordance with the operation and maintenance procedures prescribed in the Go Fan Yourself® Installation Manuals. If Company finds, in its sole discretion, that any Product has not provided the Twelve-Year Service Life, Company will, as its sole obligation and the End-User's sole remedy for Company's breach of this Warranty, repair or replace the Product, at its option, F.O.B. Company's factory, for a charge, payable to Company prorated on the following basis:

The End-User will be allowed a credit against Company's list price of equivalent equipment at the time of return of the Product to Company, in proportion to the percentage of Twelve-Year Service Life remaining at the time of return of the Product to the Company. The End-User will assume responsibility to pay the balance of the list price; and Company reserves the right to require payment prior to delivery of the repaired or replacement equipment.

For the avoidance of doubt, Company's responsibilities under this 12-year Warranty are as follows:

Year 1-3 - Product repaired or replaced pursuant to terms if Limited Warranty applies.
Year 4-5 - Product purchased at 40% off list price per current Service Parts Price List.
Year 6-9 - Product purchased at 25% off list price per current Service Parts Price List.
Year 10-12 - Product purchased at 10% off the price per current Service Parts Price List.

Company's responsibilities under this 5-year Warranty covering non-factory certified installations are as follows:

Year 1-3 - Product repaired or replaced pursuant to terms if Limited Warranty applies.
Year 4 - Product purchased at 35% off list price per current Service Parts Price List.
Year 5 - Product purchased at 20% off list price per current Service Parts Price List.

WHAT THIS WARRANTY DOES NOT COVER

-any defects or damages caused by:

(a) failure to properly store the Product before installation;
(b) shipping and delivery of the Product if shipping is FOB Factory;
(c) neglect, accident, abuse, misuse, misapplication, or incorrect installation;
(d) repair or alteration not authorized in writing by Go Fan Yourself® personnel;
(e) improper testing, operation, maintenance, adjustment, or modification of any kind not authorized in writing by Go Fan Yourself® personnel;
OR
(f) use the Product under other than normal operating conditions or in a manner inconsistent with the product's label or instructions.
  – controls and/or any other external electronic controlling devices.
  – exclusions listed in the standard Three-Year Limited Warranty.
  – any products or components purchased prior to effective date of this Warranty.

Limitation of Warranties and Liabilities
Twelve Year Service Life Pro-Rated Warranty

This warranty is not valid

(a) if the Product's serial numbers have been removed or are illegible; OR

(b) if any warranted items repaired or replaced pursuant to this Warranty will be warranted for the remaining portion of the original Warranty subject to all the terms thereof. Company shall not be responsible for any charges for testing, checking, removal or installation of warranted items unless authorized in writing by Company personnel; OR

(c) if failed to submit records at time of performing Recommended Maintenance Schedule per the Installation and Technical Operations Guide.

LIMITATION OF LIABILITY: The remedies of the End-User set forth herein are exclusive and are the sole remedies for any failure of Company to comply with its obligations hereunder. In no event shall Company be liable in contract, in tort (including negligence or strict liability) or otherwise for damage to property or equipment other than the Products, including loss of profits or revenue, loss of use of Products, cost of capital, claims of customers of the End-User or any special, indirect, incidental or consequential damages whatsoever. The total cumulative liability of Company hereunder whether the claims are based in contract (including indemnity), in tort (including negligence or strict liability) or otherwise, shall not exceed the price of the Product on which such liability is based. Company shall not be responsible for failure to provide service parts due to causes beyond Company's reasonable control. "Lifetime" is defined as a period ending five (5) years after Go Fan Yourself® discontinues manufacturing the product, as such period is defined by Go Fan Yourself®, but in no event shall this period be less than the one year from the date that the Warranty Period commences.

END-USER'S OBLIGATIONS: In order to receive the benefits of this Warranty, the End-User must use the Product in a normal way; follow the Product's Installation Manuals; and protect against further damage to the Product if there is a covered defect. Submit records at time of performing Recommended Maintenance Schedule per the Installation and Technical Operations Guide.

OTHER LIMITATIONS: Company's obligations under this Warranty are expressly conditioned upon receipt by Company of all payments due to it, including all applicable interest charges. During such time as Company has not received payment of any amount due to it for the Product, in accordance with the contract terms under which the Product is sold, Company shall have no obligation under this Warranty. Also during such time, the period of this Warranty shall continue to run and the expiration of this Warranty shall not be extended upon payment of any overdue or unpaid amounts.

COSTS NOT RELATED TO WARRANTY: The End-User shall be invoiced for, and shall pay for, all services not expressly provided for by the terms of Warranty, including without limitation, site calls involving an inspection that determines no corrective maintenance is required. Any costs for replacement equipment, installation, materials, freight charges, travel expenses or labor of Company representatives outside the terms of this Warranty will be borne by the End-User.

OBTAIN WARRANTY SERVICE: Call Go Fan Yourself,® Service 1-847-648-4920. Company will not accept any product for return, credit or exchange unless expressly authorized by Company in writing and delivered FOB Company factory with proper Return Authorization Number attached to the product.

Any and all parts of this guide are subject to change without notification.